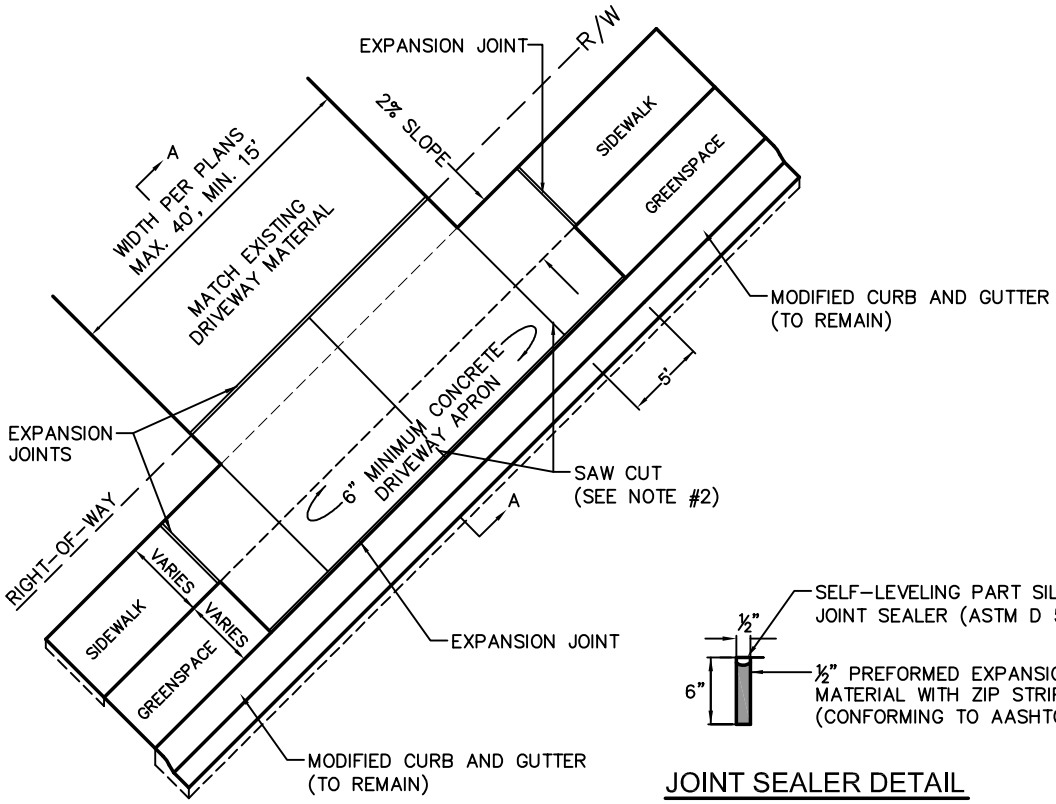

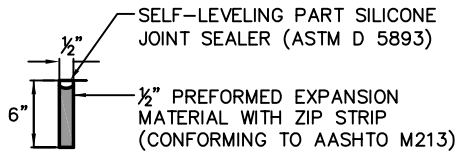

JOINT SEALER DETAIL

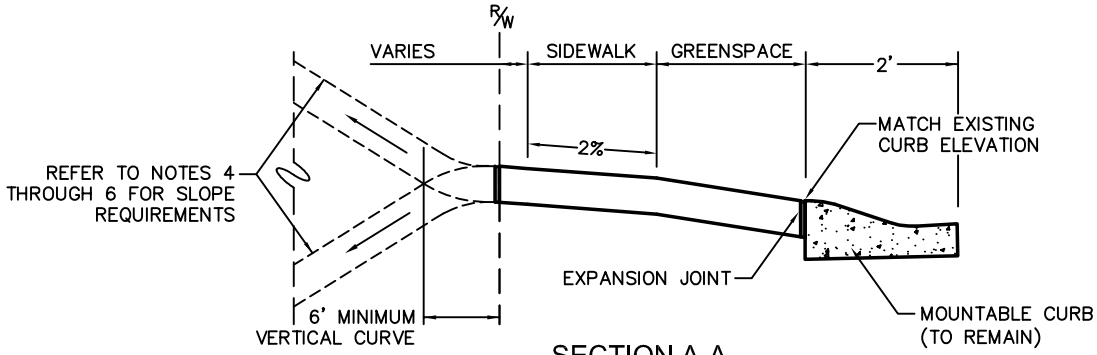

SECTION A-A

NOTES:

1. ½" PREFORMED EXPANSION MATERIAL (CONFORMING TO AASHTO M213) SHALL BE PLACED IN LOCATIONS INDICATED AND SEALED WITH SELF-LEVELING CONCRETE JOINT SEALER (ASTM D 5893).

2. CONCRETE DRIVEWAY APRON TO BE SAW-CUT AT FIFTEEN FOOT (15') INTERVALS AS SHOWN, AND FILLED WITH APPROVED JOINT SEALER (SEE DETAIL).

3. CONCRETE DRIVEWAYS TO BE CLASS A, 3000 PSI, 5.5 BAG MIX WITH 4-7% AIR ENTRAINMENT.

4 FOR ALL SUBDIVISION PLATS APPROVED AFTER THE ADOPTION OF ORDINANCE 4301 (MARCH 6, 2009); ALL VEHICULAR AND/OR EXIT DRIVES FOR ALL RESIDENTIAL AND NON-RESIDENTIAL USES ALONG A STREET WITH A MINOR COLLECTOR OR HIGHER CLASSIFICATION (AS IDENTIFIED ON THE MASTER STREET PLAN) SHALL NOT EXCEED A MAXIMUM SLOPE OF **FIFTEEN PERCENT (15%)** WITHIN THE REQUIRED SETBACK AS DETERMINED BY THE ZONING ORDINANCE.

5. FOR ALL SUBDIVISION PLATS APPROVED PRIOR TO THE ADOPTION OF ORDINANCE 4301 (MARCH 6, 2009); ALL VEHICULAR ENTRANCE AND/OR EXIT DRIVES FOR ALL RESIDENTIAL USES SHALL NOT EXCEED A MAXIMUM SLOPE OF **TWENTY PERCENT (20%)** WITHIN THE REQUIRED SETBACK AREA AS DETERMINED BY THE ZONING ORDINANCE.

6. ALL VEHICULAR ENTRANCE AND/OR EXIT DRIVES FOR ALL RESIDENTIAL AND NONRESIDENTIAL USES ALONG A STREET WITH MINOR COLLECTOR OR HIGHER CLASSIFICATION SHALL NOT EXCEED A MAXIMUM SLOPE OF **TEN PERCENT (10%)** WITHIN THE REQUIRED SETBACK AREA AS DETERMINED BY THE ZONING ORDINANCE.

N:\Engineering\Standards\2010StandardDetails\DrivewayModified.pdf

RESIDENTIAL DRIVEWAY DETAIL

FOR MODIFIED CURB AND GUTTER APPLICATIONS

CITY OF SPRINGDALE • 201 SPRING STREET • SPRINGDALE, AR • 72764