SPRINGDALE PLANNING COMMISSION
COUNCIL CHAMBERS
5:00 P.M.
201 SPRING
Agenda

I. Pre-Meeting Activities
Pledge of Allegiance
Invocation

II. Call to Order

III. Roll Call

IV. Approval of Minutes

V. Public Hearing – Rezoning

A. R16-01 **Joseph & Edna Wagy** PP 38-45
1660 Butterfield Coach Road
From A-1 to C-2
Presented by Jorgensen & Associates

B. R16-02 **Stefan & Toni Cocklin**
4715 West Seaton Drive PP 46-53
From A-1 to C-5
Presented by Stefan Cocklin

VI. Public Hearing

A. **Public hearing for changes to the**
Planning area boundary map PP 54
Presented by Patsy Christie

VII. Large Scale Developments

A. L15-18 **Lakeside at Har-Ber Meadows** PP 55-65
E. side of Founder's Park Dr. at end
of & on north side of Lynch's Prairie Court
B16-04 **A. Variance** for modification of Multi-family
Design Standards PP 66-73
B. Variance for modification of perimeter landscaping
requirement
Presented by Bates & Associates

B. L16-01 **Star Mechanical** PP74-80
122 Randall Wobbe Road
Presented by Engineering Services, Inc.

VIII. Board of Adjustment

A. B16-01 **Darryl Hill** PP 81-85
7943 W. Gibbs Road
Variance for reduction of side setback from 20' to 6'
Presented by Darryl Hill

B. B16-02 **Blue Ribbon Properties, LLC** PP 86-92
4149 N. Thompson
Variance for deletion of paved parking requirement
W16-01 **Waiver** of sidewalk requirement PP 93
Presented by Charles Presley, P.E.

C. B16-03 **Linda Burkard** PP 94-98
5423 Northern Dancer
Variance to increase height of auxiliary Building from 16' to 22'6"
Presented by Linda Burkard

D. B16-04 **Michael Pennington/Gateway Homes** PP 99-106
A. Variance for modification of Multi-family Design Standards
B. Variance for modification of perimeter landscaping requirement
Presented by Bates & Associates

E. B16-05 **David Janes** PP 107-111
4428 N. Thompson
Variance for deletion of paving requirement
Presented by David Janes

IX. Waivers

A. W16-01 **Blue Ribbon Properties, LLC** PP 112
4149 N. Thompson
Waiver of sidewalk requirement
Presented by Charles Presley, P.E.

B. W16-02 **Kevin Walker** PP 113-116
2529 McRay
Waiver of sidewalk requirement
Presented by Kevin Walker

C. W16-03 **Melvin Mounce**
1329 N. Monitor Road
Waiver of sidewalk requirement
Presented by Melvin Mounce

PP 117

D. W16-04 **Joye and Terry Mounce**
1417 N. Monitor Road
Waiver of sidewalk requirement
Presented by Joye or Terry Mounce

PP 118

X. **Planning Director's Report**

XI. **Adjourn**

The Springdale Planning Commission met in regular session on Tuesday, December 1, 2015 at 5:00 p.m. in city Council Chambers.

Prior to the meeting being called to order, Chairman Kevin Parsley led the Pledge of Allegiance and Commissioner Bob Arthur gave the invocation.

The meeting was called to order by Chairman Parsley at 4:55 p.m.

Roll call was answered by:

Bob Arthur – Vice –chairman
Joe Dunn
Charles Gaines
Vivi Haney – Secretary
Mitch Miller
Kevin Parsley – Chairman
Brian Powell

Also in attendance were Patsy Christie, Director of Planning and Community Development, Clayton Sedberry, GIS and Planning Coordinator for Planning and Ms. Sarah Sparkman, Assistant City Attorney.

Miss Vivi Haney moved to approved the minutes upon correction of the vote on C15-17. The minutes showed nine (9) yes votes when it should have read nine (9) no votes. Also, a waiver request by Dale and Diane Douglas was listed at W15-09 when it should have been listed as W15-11. Both items were corrected.

Mr. Parsley announced to the audience that there will be a special hearing on December 15, 2015 at 5:30 p.m. in council chambers. It will be a public hearing for the downtown master plan. He encouraged those in the audience to attend and further stated the details of the master plan are on the City's website.

Public Hearing – Rezoning

A. R15-29 Brenda Bohannan
3454 S. Old Missouri Road
From A-1 to C-2
Presented by Brenda Bohannan

Ms. Bohannan was present to answer any questions or comments regarding her rezoning request.

Mr. Parsley asked for Staff comments.

Ms. Christie read the Staff comments.

The adopted Comprehensive Land Use Plan indicates commercial and regional commercial uses.

The rezoning request is in keeping with the following goals and policies of the Comprehensive Land Use Plan and is recommended for approval:

Improve the City's economic base and tax structure through the promotion of healthy, stable commercial concentrations

Assure adequate land allocation for commercial areas of sufficient size and in proper locations

Encourage the development of a wide range of commercial development for the residents and tourist to include neighborhood, community and regional centers.

Mr. Parsley asked if there were those in the audience with questions or comments.

There were none.

Mr. Miller called for the vote.

VOTE:
YES: Arthur, Dunn, Gaines, Haney, Miller, Parsley, Powell,
NO: None

The rezoning was approved by a unanimous vote.

Ms. Christie stated for the record that Staff would prepare the Ordinance to go to Council on Tuesday, December 8, 2015 at 6:00 p.m. in Council Chambers.

B. R15-30 Lifestyle Development, Inc.
N. side of E. Don Tyson Parkway
3/4 mile E. of the S. Old Missouri
Road & E. DTP intersection
From SF-1 & SF-2 to SF-3
Presented by Crafton Tull

Mr. Daniel Ellis, P.E. with Crafton Tull was present on behalf of his client to answer any questions or comments.

Mr. Parsley asked Mr. Ellis if he had any comments.

Mr. Ellis said that the reason for the zoning change is along the western part of the property is all floodway and floodplain and the sanitary sewer is located in the very southeast corner which makes a portion of the property not feasible to development because it can't be served by sewer which is why they are asking for the increase in density to SF-3 to still allow for the property to be developed.

Mr. Parsley asked for Staff comments.

Ms. Christie asked Mr. Ellis if he was saying that the sewer was hard to get to and that is why his client is asking for an increase in density.

Mr. Ellis said that was a part of the reasoning. On the west side there is a floodway making that portion undevelopable and the sanitary sewer can't be extended all the way to the far west side at this time without some type of pumping station, especially the northwest portion of the property.

Ms. Christie asked what the plan was for that part of the property. She asked if it were going to be open area.

Mr. Ellis said that it would be open area, park land or something of that nature.

Ms. Christie then asked why the request for SF-3 if it is going to be open land.

Mr. Ellis said they were trying to get to the 65' wide lot allowed in an SF-3 versus the 75' to 85' width in SF-1 and SF-2. He said they were having to deal with the lot frontages.

Ms. Christie then read the Staff comments.

The adopted Comprehensive Land Use Plan indicates low density residential use.

The rezoning request is not in keeping with the Comprehensive Land Use Plan and is not recommended for approval.

The area currently zoned SF-2 is in keeping with the adopted Comprehensive Land Use Plan and a rezoning of the SF-1 to SF-2 would be recommended for approval.

She further stated that it was laid out as a subdivision in the past.

Mr. Ellis said the eastern part was but not the western part. He said his client was trying to get more lots than was previously laid out on the SF-1.

Ms. Christie said the only other comment she has is that they are having problems with not enough room for cars to be parked at lots when they are at 70' and reducing them to 65' width lots increases that problem. She said her recommendation would be to change the SF-1 to SF-2 and keep the SF-2 portion as is and recommend against an SF-3.

Mr. Parsley asked if there were those in the audience that had any questions or comments.

There were none.

Mr. Parsley said that he was with Patsy regarding the SF-3. He said SF-2 would be more palpable and wanted to know if his client would be willing to change the SF-1 to an SF-2 zoning.

Mr. Ellis said that he visited with his client and if the city is only willing to change the SF-1 to SF-2 then he is willing to amend his request.

Ms. Christie stated that he would be willing to only rezone the SF-1 portion of the property to SF-2.

Mr. Ellis said that he would.

Mr. Miller called for the vote.

VOTE:
YES: Dunn, Gaines, Haney, Miller, Parsley, Powell, Arthur
NO: None

The amended request to rezone only the SF-1 to SF-2 was approved by a unanimous vote.

Ms. Christie stated for the record that Staff would prepare the Ordinance to go to Council on Tuesday, December 8, 2015 at 6:00 p.m.

C. R15-31 Macrich, LLC (Marjorie Brooks, Mgr.)
S. side of Apple Blossom Lane, W. of
Highway 71 north
From A-1 to P-1
Presented by Crafton Tull

Mr. Tom Henley, P.E. with Crafton Tull was present on behalf of his client to answer any questions or comments.

Mr. Henley said he was also representing the Northwest Arkansas Catholic High School Committee that is looking at purchasing this property, subject to the rezoning.

He further stated that the rezoning does not encompass the entire 75 acres but just the northern 45 acres.

Mr. Parsley asked for Staff comments.

Ms. Christie read the Staff comments.

The adopted Comprehensive Land Use Plan indicates low density residential use.

The rezoning request is in keeping with the follow goals and policies of the Comprehensive Land Use Plan and is recommended for approval.

Acquisition of desirable sites well in advance of need.

Community facilities should be centrally located in easily accessible areas within the City, adjacent to major streets to accommodate traffic, well buffered from nearby residential areas, and on adequate size parcels to accommodate future expansion.

Locate middle schools, junior high schools and high schools on major collectors and/or arterial streets to improve access and limit adverse impacts of this higher intensity use on residential neighborhoods.

Mr. Parsley asked if there were those in the audience that had questions or comments.

Mr. David Gilbert said that his house is adjacent to this property and he thinks that the rezoning to P-1 is a great use for this property and he is for it. He said he has concerns about Apple Blossom Road because it is so narrow but he feels that it can be worked out among the four jurisdictions.

Mr. Parsley asked what the time frame was for developing this piece of property.

Mr. Henley said that fund raising will play a major role in getting the school built. He further stated that he has informed the City of Lowell regarding the rezoning and he will be on the Monday agenda for informational purposes only.

Mr. Dunn called for the vote.

VOTE:
YES: Gaines, Haney, Miller, Parsley, Powell, Arthur, Dunn
NO: None

The rezoning was approved by a unanimous vote.

Ms. Christie said that Staff will prepare the Ordinance that will go to Council either on Tuesday, December 8, 2015 or Tuesday, January 12, 2015 at 6:00 p.m.

D. R15-32 First Security Bank
Approx. 1,320 ft. N. of Sunset Ave.
150' E. of Clayton
From A-1 to C-2
Presented by Engineering Services, Inc.

Mr. Jason Appel with Engineering Services, Inc. was present on behalf of his client to answer any questions or comments.

Mr. Parsley asked for Staff comments.

The adopted Comprehensive Land Use Plan indicates commercial use.

The rezoning request is in keeping with following goals and policies of the Comprehensive Land Use Plan and is recommended for approval.

Improve the City's economic base and tax structure through the promotion of healthy, stable commercial concentrations

Assure adequate land allocation for commercial areas of sufficient size and in proper locations

Encourage the development of a wide range of commercial development for the residents and tourist to include neighborhood, community and regional centers.

Mr. Parsley asked if there were those in the audience that had comments or questions.

Mr. Dale Gorman who lives on Westgate Street spoke. He said he was concerned about the access.

Ms. Christie said the access will be off of Clayton Street.

Mr. Powell called for the vote.

VOTE:
YES: Haney, Miller, Parsley, Powell, Arthur, Dunn, Gaines
NO: None

The rezoning was approved by a unanimous vote.

Ms. Christie stated for the record that Staff would prepare the Ordinance to go to Council on Tuesday, December 8, 2015 at 6:00 p.m.

E. R15-33 Haag-Brown Development, LLC
4224 W. Sunset Avenue
From C-2 to C-5
Presented by Engineering Services, Inc.

Mr. Bo Wilkins with Engineering Services, Inc. was present on behalf of his client to answer any questions or comments. He said because his client needed a drive through his client is requesting a C-5 zoning.

Mr. Parsley asked for Staff comments.

Ms. Christie read the Staff comments.

The adopted Comprehensive Land Use Plan indicates commercial use.

The rezoning request is in keeping with the following goals and policies of the Comprehensive Land Use Plan and is recommended for approval:

Improve the City's economic base and tax structure through the promotion of healthy, stable commercial concentrations

Assure adequate land allocation for commercial areas of sufficient size and in proper locations

Encourage the development of a wide range of commercial development for the residents and tourist to include neighborhood, community and regional centers.

Mr. Parsley asked if there were those in the audience with comments or questions.

There were none.

Mr. Powell called for the vote.

VOTE:

YES: Miller, Parsley, Powell, Arthur, Dunn, Gaines, Haney
NO: None

The rezoning was approved by a unanimous vote.

Ms. Christie stated for the record that Staff would prepare the Ordinance to go to Council on Tuesday, December 8, 2015 at 6:00 p.m.

F. R15-34 Poultry Growers, Inc.
315 & 317 E. Emma Avenue
316 E. Meadow
From I-1 to C-3
Presented by Engineering Services, Inc.

Mr. Jason Appel with Engineering Services, Inc. was present on behalf of his client to answer any questions or comments.

Mr. Parsley asked for Staff comments.

Ms. Christie read the Staff comments.

The adopted Comprehensive Land Use Plan indicates Downtown District.

The rezoning request is in keeping with the following Goals and policies of the Comprehensive Land Use Plan and is recommended for approval.

Promote a healthy and attractive downtown district.

Promote a pedestrian oriented downtown serving residents as well as tourists and protect the downtown's historic character.

Promote the preservation and enhancement of historic features in the downtown area, possibly through incentive programs and similar mechanisms, (e.g. Tyson and George first office buildings).

Mr. Parsley asked if there were those in the audience that had any comments or questions.

There were none.

Mr. Miller called for the vote.

VOTE:

YES: Parsley, Powell, Arthur, Dunn, Gaines, Haney, Miller
NO: None

The rezoning was approved by a unanimous vote.

Ms. Christie stated for the record that Staff would prepare the Ordinance to go to Council on Tuesday, December 8, 2015 at 6:00 p.m.

G. R15-35 John & Kathryn Taylor Joint Revocable Trust
102 E. Randall Wobbe Road
From MF-4 to I-1
Presented by Engineering Services, Inc.

Mr. Jason Appel with Engineering Services, Inc. was present on behalf of his client to answer any questions or comments. He stated that this piece of property is approximately 16 acres and is located adjacent to Star Mechanical facility on the west side.

Mr. Parsley asked for Staff comments.

Ms. Christie read the Staff comments.

The adopted Comprehensive Land Use Plan indicates medium density residential use.

The rezoning request is not in keeping with the Comprehensive Land Use Plan and is not recommended for approval.

Ms. Christie asked if it were possible to leave a buffer on the east side to the residents in MF-4 and not be industrial all the way to the property line.

Mr. Appel said he didn't have the discussion with the owners and he thought their preference is that all of the property would go to I-1. He said eventually Star Mechanical is going to take this property from the trust. He further stated that they are not really a multi-family facility.

Ms. Christie asked if it could be a lesser rezone to allow for a parking area. She said that if it is all rezoned to I-1 and it could meet the fire code it could be right up against those houses. She said there could be noise problems and she felt it was important to protect the residential areas.

Mr. Appel asked what width for the buffer would the commission want.

Ms. Christie said since she did not know what the intended use of the property will be she couldn't answer definitely.

Mr. Appel asked about going commercial.

Ms. Christie said ideally the rezoning could be O-1.

Mr. Appel said he knows what they would prefer to have which is some sort of open storage that could be screened and they could have some sort of buffer for the screen.

Ms. Christie asked if they could put a berm that would be sufficient.

Mr. Appel said that would be more acceptable to his clients as opposed to an O-1 zoning.

Mr. Gaines wanted to know if his client or ESI had any conversation with the residents.

Mr. Appel said there had been no discussions other than the notification letters.

Mr. Parsley asked if there were those in the audience that had questions or comments.

There were none.

Ms. Christie asked if they were on a time frame so that they could perhaps look at a buffer strip.

Mr. Appel said they could do a 50' O-1 buffer between the MF-4 and the I-1.

Mr. Powell asked what the plans were for this property.

Mr. Appel, said the initial intent will have a 36,000 square foot storage facility. He said it is like a pipe warehouse. There will be some parking and some drive area around it. He said they were just expanding their facility.

Ms. Christie said that once it is rezoned to I-1 the whole piece of property can be industrial use.

Mr. Powell said that even if they just did a partial I-1 there will still be the residents on the east property line.

Mr. Appel said they can leave a buffer as long as they can put a parking area in that buffer. He said they would not be putting an O-1 use in that area.

Ms. Christie asked if they could leave the rest MF-4 as long as a parking lot could go in.

Mr. Appel stated that if it was allowed in an MF-4.

Mr. Parsley said he didn't know, as far as dividing the property up and putting in an O-1, he said he thought there were others ways to solve the dilemma with berms and landscaping.

Ms. Sparkman pointed out that it could be discussed at this meeting but it could not be a requirement for the rezoning.

Ms. Christie said that an MF-4 does not allow for a parking lot. She said they would have to go to some commercial type use in order to use it as a parking lot. She said O-1 comes to mind first.

Mr. Appel stated they could go 65' if they can get a parking area in it with curb appropriate and have landscape buffers that would be needed.

Mr. Arthur said that if they go with the I-1 and the large scale comes through then they could put in the berm, parking space or whatever they wanted to do to give it some separation between the I-1 and the residents.

Ms. Haney said that if they put O-1 in that 65' area then they would be protecting the residents, but if they rezone the entire parcel to I-1 then it can have anything allowed in an I-1 zone.

Ms. Christie stated the other option would be to allow the buffer to be a warehouse district, which would be limited manufacturing and a parking lot could be there. The difference between an I-1 and a W-1; in an I-1 district allows trades and services, automotive services, wholesale and warehouse, limited manufacturing, parking lot, temporary buildings.

Mr. Parsley said he thought the biggest issue is the noise that could be created that would be a discomfort to the residents.

It was determined that the I-1 zone has an automatic 50' setback which would be enough to protect the residential area.

Mr. Powell called for the vote.

VOTE:
YES: Powell, Arthur, Dunn, Gaines, Miller, Parsley
NO: Haney

The rezoning was approved by a vote of six (6) yes and one (1) no.

Ms. Christie stated for the record that Staff would prepare the Ordinance to go to Council on Tuesday, December 8, 2015 at 6:00 p.m.

H. R15-36 Joey & Terry Mounce
E. side of Monitor Road
.3 miles N. of Scott Hollow Rd.
From A-1 to SF-1
Presented by Gene Buescher

Mr. Buescher was present on behalf of his client to answer any questions or comments. He said that in order to build on the 1 1/2 acre lot, the area must be rezoned.

Mr. Parsley asked for Staff comments.

Ms. Christie read the Staff comments.

The adopted Comprehensive Land Use Plan indicates low density residential use.

The rezoning request is in keeping with the following goals and policies of the Comprehensive Land Use Plan and is recommended for approval.

Protect the positive aspects of neighborhood character throughout the City.

Appropriate locations for single-family and multi-family residential development should be provided based on accessibility, site suitability, utility availability, neighborhood compatibility and environmental factors.

Assure adequate land allocation for residential purposes by providing lots of adequate size.

Mr. Parsley asked if there were those in the audience that had questions or comments.

There were none.

Mr. Miller called for the vote.

VOTE:
YES: Arthur, Dunn, Gaines, Haney, Miller, Parsley, Powell
NO: None

The rezoning was approved by a unanimous vote.

Ms. Christie stated for the record that Staff would prepare the Ordinance to go to Council on Tuesday, December 8, 2015 at 6:00 p.m.

Preliminary Plats, Replats, and Final Plats

A. PP15-01 Revised Preliminary Plat for Habberton Ridge
SE corner of Don Tyson Parkway
& Horn Lane, east side of Habberton
Presented by Engineering Services, Inc.

Mr. Jason Appel with Engineering Services, Inc. was present on behalf of his client to answer any questions or comments. He said they had made some slight adjustments to the layout, specifically to the Phase I portion. He said they added a couple more duplex lots, modified the green space, but they still had the 15% green space as required for a PUD.

Mr. Parsley asked for Staff comments.

Ms. Christie stated to meet the fire code they added second access point out to Habberton from the cul-de-sac. She said that provides a second access point, which they didn't have before.

Mr. Appel stated that it is a kind of temporary access for Phase I until the second phase is built and then they will have the two access points on Don Tyson Parkway.

Ms. Christie read the Staff comments.

1. Street names will need to be provided and approved prior to final plat acceptance.
2. All comments from the utility companies and other city departments must be addressed prior to approval of construction plans.

Mr. Parsley asked if there were those in the audience that had questions or comments.

There were none.

Mr. Arthur moved to approve the preliminary plat subject to Staff comments. Mr. Miller seconded the motion.

VOTE:
YES: Dunn, Gaines, Haney, Miller, Parsley, Powell, Arthur
NO: None

The revised preliminary plat was approved by a unanimous vote.

B. PP15-02 Clayton Street Business Park
N. side of W. Sunset, E. side of Clayton
Presented by Engineering Services, Inc.

Mr. Jason Appel was present on behalf of his client to answer any questions or comments. He stated that they are proposing to split the property into eleven (11) commercial lots for office/warehouses. He further stated they are showing the access onto Clayton through the adjacent property.

Mr. Parsley asked for Staff comments.

Ms. Christie read the Staff comments.

Planning Comments

1. Street names will need to be provided and approved prior to final plat acceptance.
2. All comments from the utility companies and other city departments must be addressed prior to approval of construction plans.

Engineering Comments

1. Sect 107 The site area of disturbance is greater than 1 acre. A storm Water Pollution Prevention Plan, Grading Permit Application and $500.00 fee, in accordance with Chapter 107, must be submitted to the Planning Office prior to final approval of construction plans. See applications & Form/Grading at http://wwwSpringdalear.gov/department/planning

Mr. Parsley asked if there were those in the audience with questions or comments.

There were none.

Mr. Parsley moved to approve the preliminary plat subject to Staff comments. Ms. Haney seconded the motion.

VOTE:
YES: Gaines, Haney, Miller, Parsley, Powell, Arthur, Dunn
NO: None

The preliminary plat was approved by a unanimous vote.

C. RP15-07 Replat – Grand Valley Subdivision, Phase I
S. side of Don Tyson Parkway
East of Butterfield Coach Road
Presented by Engineering Services, Inc.

Mr. Jason Appel with Engineering Services, Inc. was present on behalf of his client to answer any questions or comments. Mr. Appel said they were not adding any lots, but rather manipulating the lot lines to conform with the new flood zone map. He further stated all the lots still meets minimum standards. The majority of what was done was they took off two to three off the back of the lots and they will add to the POA lot, which is directly adjacent to those lots.

Ms. Christie asked if it took all those lots out of the floodplain so that flood insurance is not required for any of those lots.

Mr. Parsley asked for Staff comments.

Ms. Christie read the Staff comments.

1. All comments from the utility companies and other city departments must be addressed prior to approval.

Mr. Parsley asked if there were those in the audience with comments or questions.

There were none.

Ms. Haney moved to approve the replat subject to Staff comments. Mr. Miller seconded the motion.

VOTE:
YES: Haney, Miller, Parsley, Powell, Arthur, Dunn, Gaines
NO: None

The replat was approved by a unanimous vote.

Ms. Christie stated for the record that if Mr. Appel wanted the replat to go to Council, he must have the Ordinance into the Mayor's office by noon on Thursday, December 3, 2015.

Large Scale Developments

A. L15-17 Frez-N-Stor
311 W. Sunset Avenue
B15-68 610 Porter Avenue
A. Variance for reduction of required parking from 349 to 135
B. Variance for modification of landscaping requirement per Chapter 56
C. Variance to allow driveway width on Sunset to remain as is
Presented by Engineering Services, Inc.

Mr. Bo Wilkins with Engineering Services, Inc. was present on behalf of his client to answer any questions or comments. He said his client is trying to add a couple of different warehouse additions/freezer additions. One is about 40,000 square feet and one that is 25,000 square feet. The purpose of the variances is because they are trying to add a couple of additions in the middle of the property.

Mr. Parsley asked for Staff comments.

Ms. Christie said they have looked at a couple of times. It is an existing business that has been there a long time. It is her understanding that they are going through some updates that may take some of the buildings off that front onto Sunset and change some of the access points in the future.

Planning Comments

1) Show the typical dimensions for regular parking, (9'x19').
2) Frontage landscaping is required in accordance with Chapter 56.
3) Landscape islands are required at a rate of 1 per 15 parking spaces, in accordance with Chapter 56.
4) Interior parking area landscaping is required in accordance with Chapter 56. Show the total area of the parking lot, the percentage of landscaping required and the percentage of landscaping provided. Include a drawing that identifies all areas included in the calculations.
5) All comments from the utility companies and other city departments must be addressed prior to approval of construction plans.

Engineering Comments

1) ***Sect 112-8(i)*** Need to show
   a. Original topography
   b. Location and size of utilities and drainage systems.
   c. Driveway widths, radius, and distance from other property lines and street intersection. Detail of modified curb.
   d. Show the final contours.
2) Need to note that modified curb is required at the drives.

3) ***Sect 106*** Submit a preliminary drainage report, as outlined in the City of Springdale Drainage Criteria Manual.
4) Sect 107 The site area of disturbance is greater than 1 acre. A storm Water Pollution Prevention Plan, Grading Permit Application and $500.00 fee, in accordance with Chapter 107, must be submitted to the Planning Office prior to final approval of construction plans. See Applications & Forms / Grading at http://www.springdalear.gov/department/planning_and_community_development/

Mr. Parsley asked if there were those in the audience with questions or comments.

There were none.

It was decided to vote on all three variances together.

Mr. Dunn called for the vote on the variances.

VOTE:
YES: Miller, Parsley, Powell, Arthur, Dunn, Gaines, Haney
NO: None

All three variances were approved by a unanimous vote.

Mr. Powell moved to approve the large scale subject to Staff comments. Mr. Miller seconded the vote.

VOTE:
YES: Parsley, Powell, Arthur, Dunn, Gaines, Haney, Miller
NO: None

The large scale was approved subject to Staff comments by a unanimous vote.

B.	L15-20	ABC Homes Development N. side of Chapman, W. of Cambridge.
	B15-69	A. Variance deleting 60% parking between Front and street ROW B. Variance for modification of Commercial Design Standards Presented by Engineering Services, Inc.

Mr. Jason Appel with Engineering Services, Inc. was present on behalf of his client to answer any questions or comments. He said that this project is approximately a one acre parcel that will front on Chapman. He said this facility is proposed to be a children's home. ABC Homes has a similar home in Jonesboro and transfer of ownership from the church to the ABC Homes. He further stated the variances they are requesting; one is for the parking in front with the way it was broke out for the church there were no options to put parking on the side. He said the Commercial Design variance is so the building will look like a residence. It will be all brick, with a shingle roof.

Ms. Christie said that this is a non-profit organization that is building this structure in a P-1 zone.

Mr. Appel said that was correct.

Ms. Christie asked Mr. Sedberry if there was a requirement to meet commercial design standards in a P-1 zone.

Mr. Sedberry said Staff had already set a precedent for applying design standards to institutional facilities.

Ms. Christie asked if the outdoor storage of trash facilities will be screened.

Mr. Appel stated that it will be screened. He said it meets the standard as well.

Planning Comments

1) All comments from the utility companies and other city departments must be addressed prior to approval of construction plans.
2) This development must comply with the City Of Springdale Commercial Design Standards or a variance is required. Front, side, and rear elevations, lighting plan, and a written response to design standard comments are required at the time of resubmission (3 copies). See attached design standard comments.

Commercial Design Standards Comments

1) Elevations need to match site layout of building.
2) No more than 60% of the off street parking area for the entire property can be located between the front façade within the front yard of the principal building and the primary abutting street unless the building and/or parking lots are screened from view by outlot development (i.e. restaurants) and additional tree plantings and/or berms.
3) Outdoor storage, trash collection, and loading areas must not be located within 20' of any public street, public sidewalk, or internal pedestrian walkway.
4) Building façades shall include a repeating pattern with no less than three of the following: color change; texture change; material module change; expressions of architectural or structural bay through a change in plane no less than 12 inches in width, such as an offset, reveal, or projecting rib. At least one element must repeat horizontally and no element shall repeat at intervals of greater than 30' horizontally or vertically.

Engineering Comments

1) Sect 107 The site area of disturbance is greater than 1 acre. A storm Water Pollution Prevention Plan, Grading Permit Application and $500.00 fee, in accordance with Chapter 107, must be submitted to the Planning Office prior to final approval of construction plans. See Applications & Forms / Grading at

http://www.springdalear.gov/department/planning_and_community_development/

Mr. Parsley asked if there were those in the audience that had questions or comments.

There were none.

It was decided to take the two variances together.

Mr. Miller called for the vote on the variances.

VOTE:
YES: Powell, Arthur, Dunn, Gaines, Haney, Miller, Parsley
NO: None

Both variances were approved by a unanimous vote.

Ms. Haney moved to approve the large scale subject to Staff comments. Mr. Miller seconded the vote.

VOTE:
YES: Arthur, Dunn, Gaines, Haney, Miller, Parsley, Powell
NO: None

The large scale development was approved subject to Staff comments by a unanimous vote.

C. L15-21 Tyson Foods, Inc. PIHD Building
NE corner of E. Meadow & N. Commercial
E. of Arkansas –Missouri Railroad tracks
Presented by Engineering Services, Inc.

Mr. Jason Appel was present on behalf of his client to answer any questions or comments. He said this will be the new office building for Tyson in downtown. He said he felt that they have met all the Commercial Design Standards. He said they had a couple of comments to resolve with the fire department but other than that, the project is in good shape.

Mr. Parsley asked for Staff comments.

Ms. Christie said they had just approved the rezoning to C-3.

Planning Comments

1) This property must be rezoned to C-3 (Downtown Commercial).
2) All comments from the utility companies and other city departments must be addressed prior to approval of construction plans.
3) This development must comply with the City Of Springdale Commercial Design Standards or a variance is required.

4) Streetlights should meet standards proposed in the downtown master plan or match existing street lights along Emma Avenue.

Engineering Comments

1) Sect 107 The site area of disturbance is greater than 1 acre. A storm Water Pollution Prevention Plan, Grading Permit Application and $500.00 fee, in accordance with Chapter 107, must be submitted to the Planning Office prior to final approval of construction plans. See Applications & Forms / Grading at http://www.springdalear.gov/department/planning_and_community_development/

Mr. Parsley asked if there were those in the audience with comments or questions.

There were none.

Ms. Haney moved to approve the large scale subject to Staff comments. Mr. Powell seconded the motion.

VOTE:
YES: Dunn, Gaines, Haney, Miller, Parsley, Powell, Arthur
NO: None

The large scale was approved subject to Staff comments by a unanimous vote.

D. L15-22 Tyson Foods, Inc.
SW corner of E. Huntsville Ave. &
N. Monitor Road
Concept of Detention
Presented by Engineering Services, Inc.

Mr. Jason Appel was present on behalf of his client to answer any questions or comments. He said the current name for the project incubation technology center for Tyson Foods.

Mr. Parsley asked for Staff comments.

Planning Comments

6) All comments from the utility companies and other city departments must be addressed prior to approval of construction plans.

Engineering Comments

1) ***Sect 112-4*** Streetlights are required at each intersection and along the street at intervals of 300 to 350 feet as measured along the centerline of the street.

2) The concept of detention must be approved by the Planning Commission.

3) Sect 107 The site area of disturbance is greater than 1 acre. A storm Water Pollution Prevention Plan, Grading Permit Application and $500.00 fee, in accordance with Chapter 107, must be submitted to the Planning Office prior to final approval of construction plans. See Applications & Forms / Grading at http://www.springdalear.gov/department/planning_and_community_development/

Mr. Parsley asked if there were those in the audience with questions or comments.

There were none.

Mr. Arthur moved to approve the large scale subject to Staff comments. Mr. Miller seconded the motion.

VOTE:
YES: Gaines, Haney, Miller, Parsley, Powell, Arthur, Dunn
NO: None

The large scale was approved subject to Staff comments by a unanimous vote.

Ms. Haney called for the vote on the concept of detention.

VOTE:
YES: Gaines, Haney, Miller, Parsley, Powell, Arthur, Dunn
NO: None

The concept of detention was approved by a unanimous vote.

Board of Adjustment

A. B15-65 Angela's Bakery
Corner of S. Old Missouri Road
& Dusty Lane
Variance for Modification of Commercial
Design Standards
W15-09 Waiver of street improvements to Dusty Lane
Presented by Blew & Associates

Mr. Jorge Dequesne with Blew & Associates was present on behalf of his client to answer any questions or comments. He said the project was going to be a commercial bakery. The property is bordered on the north side by a flood plain and is bordered on the east and south by roads.

He further stated the reason for the variance on the Commercial Design Standards is that his clients don't want a main entrance on Dusty Lane. He said that section of the building is where they put in their kitchen and all their baking area and that would be difficult to put in a customer entrance there. He said all the parking is on the north side. He said they wanted a waiver on Dusty Lane as there are no other improvements on it.

Mr. Parsley asked for Staff comments.

Ms. Christie stated that the main entrance to the bakery will face Old Missouri Road. She said the access to the building on the Dusty Lane side is for employees. She asked if they wanted to drive off of the site onto Dusty Lane.

Mr. Dequesne said they do not. He said the only access off of Dusty Lane side is just for breads and materials.

Ms. Christie said that they have an access and Mr. Dequesne said that they do.

Ms. Christie asked if there is a way to drive from the parking lot in front of the building, drive around and enter onto Dusty Lane.

Mr. Dequesne said not in its current condition. He said he was sure what Ms. Christie was asking.

Ms. Christie said there have been situations in the past where a building was built on a corner and the backside of it was only to be accessed to the kitchen but by the time the project was finished, one could come out of the building, get into a car pull around and come out on the street on the other side.

He said this will be separate. There will be grass in between and there is not going to be a connection between the two. At the end of the access lane on the back side, there will be a dumpster that will block access from that side to the parking lot.

Ms. Christie asked then that the only access off of Dusty Lane will be delivery trucks and trash. She said she didn't have a problem of not having a customer entrance on the Dusty Lane side but she does have a problem of not improving Dusty Lane because the truck traffic that will be using that road which is not in very good shape. It needs to be widen out to city standards if they are going to use it for that kind of access.

She reiterated that she didn't have a problem with the variance request regarding the modification of Commercial Design Standards but she does have with the waiver of street improvements.

Mr. Parsley asked if there were those in the audience that had questions or comments.

Ms. Haney asked if they would be willing to go with the street improvements on Dusty Lane due to the fact that there are residences on it and the business will be creating traffic from deliveries.

Ms. Christie said that Council really has to make the decision on the waiver. All the commission will be doing is making a recommendation to council.

Mr. Arthur asked what Staff was asking them to do as far as street improvements are concerned.

Ms. Christie said it is a local street. They would have to do curb and gutter, sidewalks and whatever drainage improvements that would be needed.

Mr. Dunn asked how they were going to prevent people coming off the parking lot and getting onto Dusty Lane. He wanted to know if that would be curb and guttered.

Ms. Christie said that was her question. She wanted to know if they could go around the building or pull across the parking lot and pull onto Dusty Lane. She said that Mr. Dequesne indicated that they would not be able to do that.

Mr. Dequesne said that on the parking lot there will be curb and gutter and that will prevent people from trying to access Dusty Lane from the parking lot.

It was determined that the length of the lot is a 150' along Dusty Lane and that is the length the street improvements would have to be on their half of the street.

Mr. Parsley asked if the bakery was only responsible for half of the road improvements, it seemed to him there were be more damage to the road. He asked if the city would do the other half of the road at that time.

Ms. Christie said there would be the option that the council could ask for payment in-lieu of improvements or they could ask for a Bill of Assurance so that when the other side of the road is improved they would have to pay their portion of their cost.

Ms. Haney called for the vote on the variance.

VOTE:
YES: Parsley, Powell, Arthur, Gaines, Haney, Miller
NO: Dunn

The variance was approved by a vote of six (6) yes and one (1) no.

Mr. Miller called for the vote on the waiver.

VOTE:
YES: None
NO: Miller, Parsley, Powell, Arthur, Dunn, Gaines, Haney

The vote was unanimous. The waiver will go to Council with a recommendation for denial.

B. B15-66 Kyle Robert Sherrill
4739 Silent Grove Road
Variance for reduction of frontage on
2 lots from 200' to 192.44'
Presented by Leonard Gabbard/Matthew James

Mr. Leonard Gabbard was present on behalf of his client to answer any questions or comments. He said the property is approximately 5.8 acres and it is zoned A-1. He said

his clients want to split it evenly which would give them approximately 2.9 acres more or less on each lot, however, they will need a variance from the 200' frontage on each lot to 192.44' per lot.

Mr. Parsley asked for Staff comments.

Ms. Christie said Staff didn't have an issue with the variance request. She stated that 192.44' is pretty close.

Mr. Parsley asked if there were those in the audience that had questions or comments.

There were none.

Ms. Haney called for the vote.

VOTE:
YES: Powell, Arthur, Dunn, Gaines, Haney, Miller, Parsley
NO: None

The variance was approved by a unanimous vote.

C. B15-67 Harrison French & Associates for
Wal-Mart Real Estate Business Trust
2004 S. Pleasant Street
Variance to increase area for wall sign
Presented by Brittany Lewis with Harrison French

Ms. Lewis was present on behalf of her client to answer any questions or comments. She said the sign ordinance currently allows 300 square feet for a wall sign. She further stated that the store currently has over 500 square feet on it. She said they were asking for one additional sign which would be 38.47 more square feet than what is existing. The sign they are asking for on the front says Auto Center with an arrow. The tire and lube will be replaced with the Auto Center sign.

Ms. Christie asked if the one they will see will be on the Robinson Avenue side of Wal-Mart.

Mr. Parsley asked if there were those in the audience with questions or comments.

There were none.

Mr. Arthur called for the vote.

VOTE:
YES: Arthur, Dunn, Gaines, Haney, Miller, Powell
NO: None
RECUSE: Parsley

The variance was approved by a vote of six (6) yes and one (1) recusal.

D. B15-68 Frez-N-Stor
610 Porter Ave. & 311 W. Sunset
A. Variance for reduction of required parking from 349 to 135
B. Variance for modification of landscaping requirement per Chapter 56
C. Variance to allow driveway width on Sunset to remain as is
Presented by Engineering Services, Inc.

These variances were approved by a unanimous vote in conjunction with the large scale development.

E. B15-69 Cross Church, Inc.
1 acre N. of Chapman, 150' W of Cambridge
A. Variance deleting 60% parking between front and ROW
B. Variance for modification of Commercial Design Standards
Presented by Engineering Services, Inc.

These variances were approved by a unanimous vote in conjunction with the large scale development.

F. B15-70 Haag-Brown Development, LLC for Starbucks Center
4224 W. Sunset Avenue
Variance for reduction of distance back of curb and property line from 3' to 2'
Presented by Engineering Services, Inc.

Mr. Bo Wilkins with Engineering Services, Inc. was present on behalf of his client to answer any questions or comments. He said that it is an existing development and they are tearing down the existing building and replacing it with a new one. They are making some modifications to the parking area but for the most part all the exterior curb that they are leaving is out of conformance with code so they are trying to keep the curb where it is which will require a one foot variance.

Ms. Christie asked if they were taking out one driveway.

Mr. Wilkins stated they would be taking out one drive way on Highway 412 and modifying the other driveway with a slightly larger one.

Mr. Parsley asked if there were those in the audience that had questions or comments.

There were none.

Ms. Haney called for the vote.

VOTE:
YES: Dunn, Gaines, Haney, Miller, Parsley, Powell, Arthur
NO: None

The variance was approved by a unanimous vote.

Waivers

A. W15-12 Angela's Bakery, LLC
Corner of S. Old Missouri Rd. &
Dusty Lane
Waiver of street improvements to Dusty Lane
Presented by Blew & Associates

This waiver was discussed in conjunction with the variance.

B. W15-13 Rosa Echeueste
3123 Pinot Avenue
Waiver of sidewalk requirement
Presented by Rosa Echeueste

Ms. Echeueste was present with Ms. Yudith Torres with the Planning office acting as her interpreter. She said through her interpreter that her lot faces Pinot and Julio Road and she was asking for a waiver of sidewalk requirement on Julio Road.

Ms. Christie said there are sidewalks on both sides of the lot and Staff does not support sidewalk waivers.

Mr. Parsley asked if there were any questions or comments from the audience.

There were none.

Ms. Haney said she had to agree with Ms. Christie regarding continuing the sidewalk on both sides of her lot.

Mr. Gaines asked for her reason why she doesn't want to put in the sidewalk.

She said through Ms. Torres that at this time they couldn't afford to build the sidewalk on the Julio side. She was hoping for a year before she would have to put it in.

Ms. Christie asked that when they bought the lot were they not told that they would have to put a sidewalk on both Pinot and Julio.

Ms. Torres said they were told.

Ms. Christie said that was a condition for those lots that as the houses were developed sidewalks would be required both on Pinot and Julio.

Mr. Dunn called for the vote.

The Springdale Planning Commission met in a special session/public hearing on Tuesday, December 15, 2015 at 5:30 in Council Chambers.

Prior to the meeting being called to order, Chairman Kevin Parsley led the Pledge of Allegiance and Commissioner Bob Arthur gave the invocation.

This called meeting/public hearing was to hear the details regarding the Downtown Master Plan Overlay District as presented by John Hoal with H3 Engineering.

The meeting was called to order at 5:32 p.m. by Chairman Parsley.

Roll call was answered by:

Bob Arthur – Vice-chairman
Gary Compton
Roy Covert
Joe Dunn
Charles Gaines
Vivi Haney - Secretary
Mitch Miller (arrived late)
Kevin Parsley – Chairman
Brian Powell

Also in attendance were Patsy Christie, Director of Planning and Community Development, Clayton Sedberry, GIS and Planning Coordinator for Planning and Ms. Sarah Sparkman, Assistant City Attorney.

Mr. Parsley thanked everyone for coming to the meeting. He said that it is an historic day for Springdale.

Mr. Parsley introduced Mr. John Hoal with H3 Studio who helped design the Downtown Master Plan.

Mr. Hoal said that essentially tonight's meeting is a culmination of a yearlong of consensus building and ideas being thrown at the project team and city and trying to develop a plan that responds to all that they heard.

He said that he would just go over the highlights of the key things that are included in the draft of the Master Plan and then answer any questions or address any comments. He further stated that they are long term projects and what he is outlining tonight is a "policy document" which will move forward in increments and will take place in the next ten to twenty years. He reiterated that they are doable projects.

Mr. Hoal said that downtowns today are built around something that is authentic; something that is very unique which is what differentiates downtown today to a commercial shopping center. He said that Springdale has a remarkable history and a remarkable armature. The width of the street is an ideal shopping street, the length is an ideal shopping street, it just needs to be inhabited and get it going. He said the city couldn't ask for a more perfect frame from which the city could build.

He said as he looked at the economy, Springdale is in the center of a major growing region and the millennia generation and the boomers are wanting a type of experience of downtown. These two things are coming together to make this kind of a decade is really unique in revitalization.

An attractive main street is going to be critical; it has to be of a critical mass and it will be one of the greatest challenges the city faces. The city will have to be able to build enough of it to allow people to go to downtown for at least two hours. The other challenge is to continue to revitalize the neighborhoods around the downtown. He said that great downtowns have great neighborhoods around it.

He said Springdale is not picking up its fair share of the regional market. The city will have to develop a merchandising strategy. There is a clearly sufficient market to have a downtown grocery, which is important for residential as the city moves forward.

He suggested that the city needs to diversify its housing types and there is a good opportunity for a downtown hotel with the medical center being close by.

He stated that there are twelve (12) key items involved with the revitalization plan.

1. Improve the regional accessibility of Downtown Springdale.
   a. Redeveloping Thompson Street (U.S. 71-B), Huntsville Avenue, and Old Missouri Road (Arkansas Highway 265) as major context sensitive walkable Thoroughfares based upon standards set by the Institute of Traffic Engineers (ITE).
   b. Creating new, identifiable entrance gateways into Downtown from Thompson Street (U.S. 71-B), Huntsville Avenue and Old Missouri Road (Arkansas Highway 265).
   c. Utilizing green infrastructure to create beautiful landscape amenities, reduce stormwater runoff, and improve water quality.

2. Establish an expanded "Main Street" Downtown Core along Emma Avenue.
   a. Expanding and developing Emma Avenue as Downtown's "Main Street", featuring ground floor retail and hospitality businesses between Thompson Street (U.S. 71-B) and Park Street/Berry Street (to the east).
   b. Providing multiple connections from Emma Avenue to Downtown Springdale's perimeter thoroughfares.
   c. As an immediate action item, calming traffic on Emma Avenue, prohibiting truck traffic; and creating a great, walkable, outdoor dining and entertainment street.
   d. Developing a ground floor retail and merchandizing strategy for Emma Avenue.
   e. Increasing the number and diversity of international and culturally-relevant restaurants and events.
   f. ensuring sufficient and properly-located Downtown parking.
   g. Over the over the long term, rebuild Emma Avenue with an enhanced street section, as described herein.
   h. Develop a Downtown landscape program to install and maintain street trees, gardens, hanging baskets, and other landscape amenities.

3. Create a central public gathering space on Emma Avenue.
   a. Continuing the revitalization of Shiloh Square, Walter Turnbow Park, and the Arkansas-Missouri Railroad Station.
   b. Developing a vibrant, regionally-relevant public space and plaza with a "front door" from the south onto Emma Avenue.

c. Creating "active" public facades for all buildings facing Shiloh Square and Walter Turnbow Park.
d. Developing a program of seasonal and cultural events to bring local residents and visitors together.
e. Capitalizing on the Razorback Greenway and providing amenities for Greenway users.
f. Utilizing green infrastructure to create beautiful landscape amenities, reduce stormwater runoff and improve water quality.

4. Create a new municipal and civic district and gateway to Downtown Springdale.
   a. Planning the expansion of the existing Springdale Municipal Campus (City Hall and Police Department facilities) to form a major entrance to Downtown at Spring Street from Huntsville Avenue.
   b. Including in the district plan the Shiloh Museum, First United Methodist Church, and North Main Street.
   c. Planning the new district with linkages to the Shiloh Memorial Park, bluff Cemetery, and the Razorback Greenway.
   d. Utilizing green building and infrastructure best practices in new public facilities.

5. Support the continued development of major cultural, educational, and health institutions within the Downtown planning area.
   a. Working with the Jones Center to develop a master plan for the existing housing in the southeast quadrant of the area at Berry Street and Huntsville Avenue.
   b. Enhancing Downtown institutions-including the Arts Center of the Ozarks (ACO), Northwest Medical Center, the Jones Center, Springdale Public Schools, and other religious and Educational institutions-with expanded and new amenities and programmable space.
   c. Developing an improved streetscape on East Emma Avenue.
   d. Facilitating connections to adjacent institutions, educational facilities, and job training programs including: the Springdale Municipal Airport, Northwest Technical Institute; Parson's Stadium; Jones elementary School; Robert E. Lee Elementary School; and others.

6. Stabilize and retain key assets by building a mixed-use core in Downtown Springdale.
   a. Building upon the investment of Tyson Foods Inc. in its new Emma Avenue facilities.
   b. Redeveloping existing warehouse and light industrial properties north of Emma Avenue and south of the Tyson Foods Inc. Berry Street Plant.
   c. Development a Downtown landscape program to install and maintain street trees, gardens, hanging baskets, and other landscape amenities.
   d. Utilizing green infrastructure to create beautiful landscape amenities, reduce stormwater runoff, and improve water quality.
   e. Developing coordinated, centrally-located shared parking facilities to support new Downtown development and business tenants.
   f. Offering incentives to private developers to encourage the use of green building techniques and sustainability best practices.

7. Expand and reconfigure Luther George Park as a major Downtown amenity linked to Emma Avenue and surrounding neighborhoods.
   a. Expanding Luther George Park south to East Maple Avenue and north to East Emma Avenue to link Downtown neighborhoods to the "main street" concept.
   b. Providing a major entrance to Luther George Park and the Razorback Greenway on East Emma Avenue. Add a southern entrance to the park from the Razorback Greenway.
   c. Extending Water Street south to East Maple Avenue to provide four (4) public faces to

Luther George Park.

d. Facilitating the mixed-use redevelopment of the park's facing edges, including new housing.
e. Adding necessary storm water retention and infrastructure for water quality improvement.
f. Utilizing green building and infrastructure best practices in new public facilities.
g. Establishing community gardens in the park for agriculture education and small-scale locale food production.
h. Providing environmental and ecological education opportunities for all ages.

8. Re-imagine Thompson Street (U.S. 71-B) as a major civic and institutional "green boulevard" and reconnect Maple Avenue.
   a. Connecting Easts Maple and West Maple Avenue across the Arkansas-Missouri Railroad tracks as a key pedestrian and bike corridor.
   b. Enhancing the character of the Northwest Medical Center's campus on South Thompson Street (U.S. 71-B).
   c. Enhancing the presence and visibility of Springdale High School's campus on Thompson Street (U.S. 71-B).
   d. Linking Downtown to the Springdale Public Library and Murphy Park, east of South Thompson Street (U.S. 71-B).
   e. Utilizing green infrastructure to create beautiful landscape amenities, reduce stormwater runoff, and improve water quality.

9. Develop a mixed-use Downtown arts, culture & education district and connect Murphy Park to Luther George Park along Maple Avenue.
   a. Building upon the success and expansion of the Arts Center of the Ozarks (ACO) and the new Ozark Montessori School.
   b. Providing enhanced streetscape connections from the district north to Emma Avenue.
   c. Expanding outdoor events and educational programs.
   d. Developing cross-programming opportunities with Emma Avenue businesses.
   e. Facilitating the creation of mixed-use artist housing through block-by-block redevelopment.
   f. Establishing a key Downtown gateway on South Thompson Street (U.S. 71-B) at Maple Avenue.

10. Develop new Downtown housing and improve existing housing in established residential neighborhoods.
   a. Develop new and diversified housing in and adjacent to downtown.
   b. Capitalize on and provide "eyes on the park" by developing new housing that overlooks Luther George Park, Spring Creek, and the Razorback Greenway.
   c. Develop new housing on Berry Street overlooking the enhanced Jones Center campus.
   d. Work with the Springdale Housing Authority to stabilize and improve existing public housing.
   e. As an immediate action item, consider partnering with the Springdale Housing Authority to apply for a Choice Neighborhoods Planning Grant (U.S. Department of Housing and Urban Development) to address neighborhood redevelopment surrounding and including Existing public housing.
   f. Facilitate and encourage maintenance, repair of, and improvements to existing housing stock.
   g. Provide a public improvements program for residential streets.

11. Implement programming initiatives to support Downtown residents, businesses, and property owners.
    a. Safety and maintenance programs.
    b. Lighting, signage and branding programs.
    c. Downtown marketing and public relations programs, utilizing print, web and social media.
    d. Public works programs, including landscaping, green infrastructure, all utility services, and smart technology.
    e. A walkabilitiy and bikeability improvement initiative.
    f. Expanded youth and family programs.
    g. Adopting the principles of the Crime Prevention Through Environmental Design (CPTED) in all redevelopment initiatives.
    h. Developing a green building and sustainability incentive program and toolkit to encourage individual homeowners and property owners to utilize green building and infrastructure best practices on their property.

12. Expand the impact of the Downtown Springdale Alliance and other organizations.
    a. Supporting the strategic plan and vision of the Downtown Springdale Alliance and its partners for Downtown revitalization.
    b. Facilitating collaborative financing opportunities between development partners, key lending institutions, and other financiers.
    c. Creating impactful, public-private partnerships to drive Downtown community development.
    d. Developing a "Green the Downtown" tree program to plant and/or replace trees on public and right-of-ways.
    e. Developing a year-round schedule of seasonal events and programs to attract both regional visitors and Springdale residents to Downtown.

He finished by saying that Emma Avenue should become a major street through the downtown and the transportation improvements, the walkability improvements and bikeability improvements that will be needed; ultimately Emma needs the character that defines a downtown; lighting, streetscapes, way finding signs, trash receptacles.

Mr. Parsley asked if there were those in the audience that would like to comment or had questions.

Ms. Misty Murphy who is the Downtown Springdale Alliance executive director spoke. She stated that the Alliance is a non-profit that has been operational since 2012. They have worked on the Walter Turnbow Park and also served as a partner with the City on the downtown master planning process. She further stated they have helped plan some of the public hearings and provide feedback to H3 throughout this process. She feels it is a very thorough plan for the future of downtown Springdale.

Mr. Mike Gilbert who lives in Rogers but is at the meeting tonight because he has a contract on property in downtown Springdale to build his residence. He encouraged the commission to forward the resolution to Council with a recommendation for approval. He said he was putting all of his "chips" in the future of downtown Springdale. He said he works at the Jones Center, he will live on West Maple, he is going to walk to work and walk to the restaurants. He said he has made the commitment to Springdale and wants the commission to act on the momentum that has begun with the master plan.

Mr. Perry Webb, Executive President of the Springdale Chamber of Commerce stated that it is an important issue. He thanked all those that have been involved with the master plan. He said he has

been in Springdale for 21 years and now is the time to move forward with the master plan. The momentum is present and the commission, council and chamber need to make sure that it continues.

Jonathan Perrodin who along with his wife live in downtown and own a business in downtown. He said they were very invested in downtown and both he and his wife think that the master plan is a great plan. He said he feels it sets a trajectory for all the momentum that the city is experiencing to continue for the next 5 to 10 years to develop Springdale.

Mayor Sprouse wanted to thank the commission, H3 and the DSA for all the hard work they have put into the Downtown Master Plan. He said he is very excited about the plan but he is truly excited about the involvement of the community in supporting the Downtown Plan. He said that as we move forward everyone has got to remain committed. He pledged his commitment to the plan and will continue to support it.

Mr. Derek Gibson said that he has had the opportunity to represent several committees that are in the downtown area. He is on the First United Methodist Church council, he serves on the Springdale Public Housing committee, part of the Chamber board and on the Art Center of the Ozarks executive team. He said all four of the committees that he is a part of are excited about what is going on with the downtown area and all are ready to contribute and do what they can to make the master plan work. He said the Art Center of the Ozarks is doing all that they can as an executive and as a board to make sure that they are prepare to provide the leadership and be the catalyst for the arts and entertainment component.

Mr. Ervin Commacho said he has lived in Springdale since he was in the sixth grade. He said he has watched for years money going to Fayetteville. He feels that the time is right to keep the money in Springdale by providing entertainment, restaurants and he feels the commission needs to forward the resolution to council for approval so that the city can get started keeping patrons in Springdale.

Mr. Parsley asked Ms. Christie to read the resolution for adopting the Downtown Master Plan.

Ms. Christie said this will be a resolution adopting a Downtown Springdale Master Plan for the City of Springdale, Arkansas.

Whereas, with the adoption of Resolution No. 33-15 the City entered into an agreement with H3 Studio to prepare a Downtown Master Plan that would create an urban design vision for the downtown area, land development regulations, public space development, guidance for transportation and utility infrastructure, steps for neighborhood preservation, economic development strategies necessary to support the desired vision, and the establishment of a regulatory framework to guide future private investment; and

Whereas, through a series of stakeholder interviews, public meetings, focus group work sessions, and a week-long community planning charrett H3 Studio presented a Downtown Springdale Master Plan to the Planning Commission that builds upon the unique character and authenticity of the downtown returning it to a vibrant center of commerce and creativity; and

Whereas, the Plan will serve as the roadmap for the revitalization of Downtown Springdale designed to maintain a vibrant mix of residential, retail, commercial, dining, entertainment, medical, and public uses in a walkable environment that enhances the City's economy, quality of life, and sense of place; and

CITY OF SPRINGDALE
PLANNING COMMISSION
AGENDA ITEMS
JANUARY 5TH, 2016

N
W E
S

Feet
2,000 0 2,000

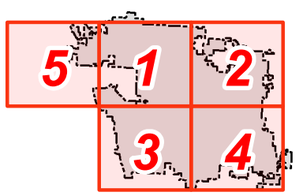

SHEET 1

- Z Rezoning Requests
- C Conditional Use Requests
- S Subdivisions (Prelim. & Final)
- R Replats
- L Large Scale Developments
- V Variance Requests
- LS Lot Splits
- W Waivers

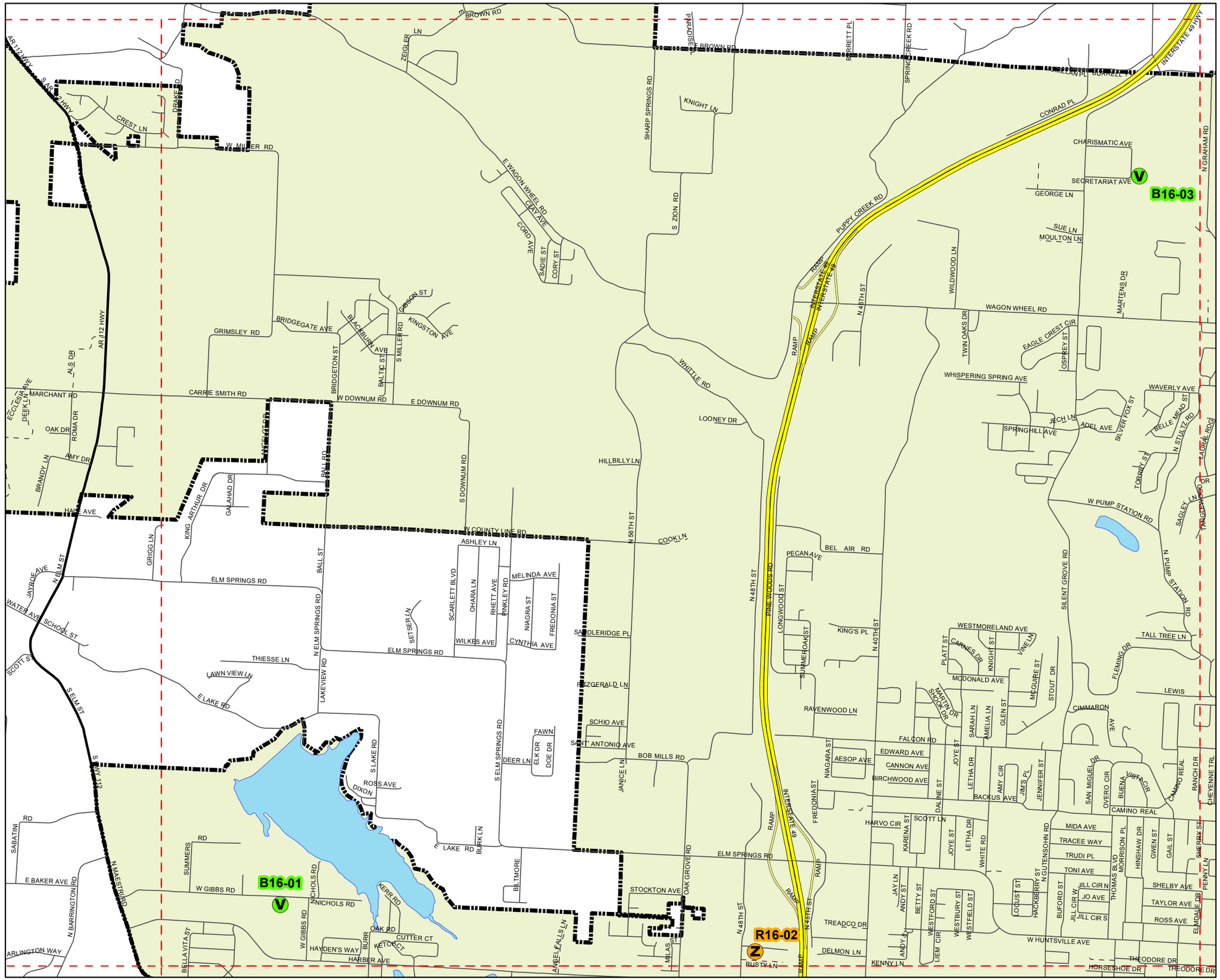

CITY OF SPRINGDALE
PLANNING COMMISSION
AGENDA ITEMS
JANUARY 5TH, 2016

N
W E
S

Feet
2,000 0 2,000

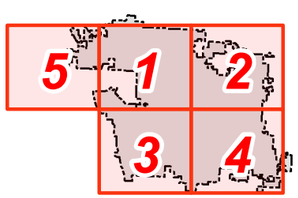

SHEET 2

- Z Rezoning Requests
- C Conditional Use Requests
- S Subdivisions (Prelim. & Final)
- R Replats
- L Large Scale Developments
- V Variance Requests
- LS Lot Splits
- W Waivers

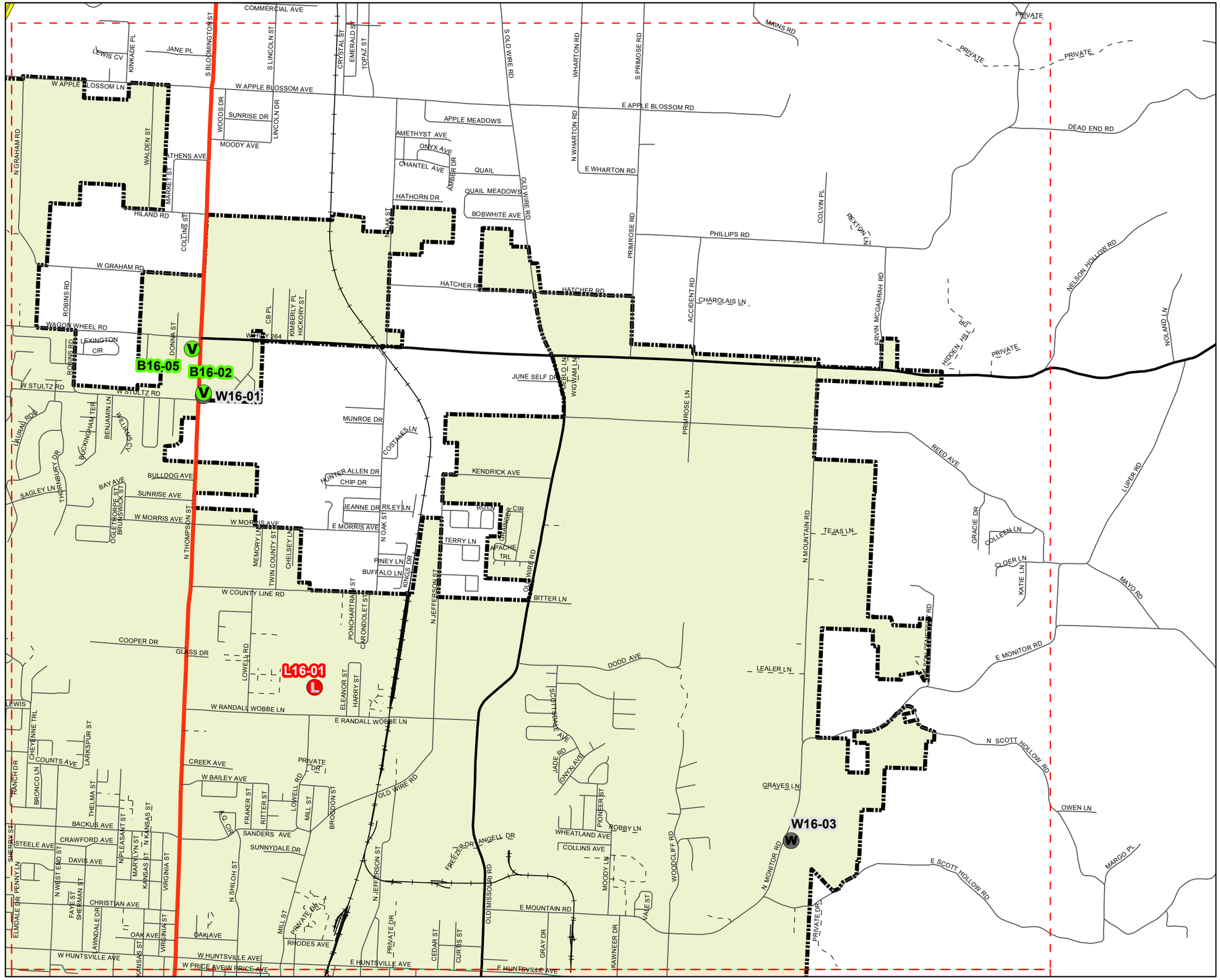

CITY OF SPRINGDALE PLANNING COMMISSION AGENDA ITEMS JANUARY 5TH, 2016

Feet

2,000 0 2,000

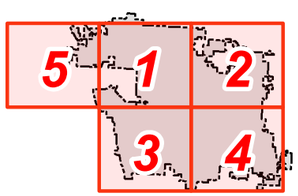

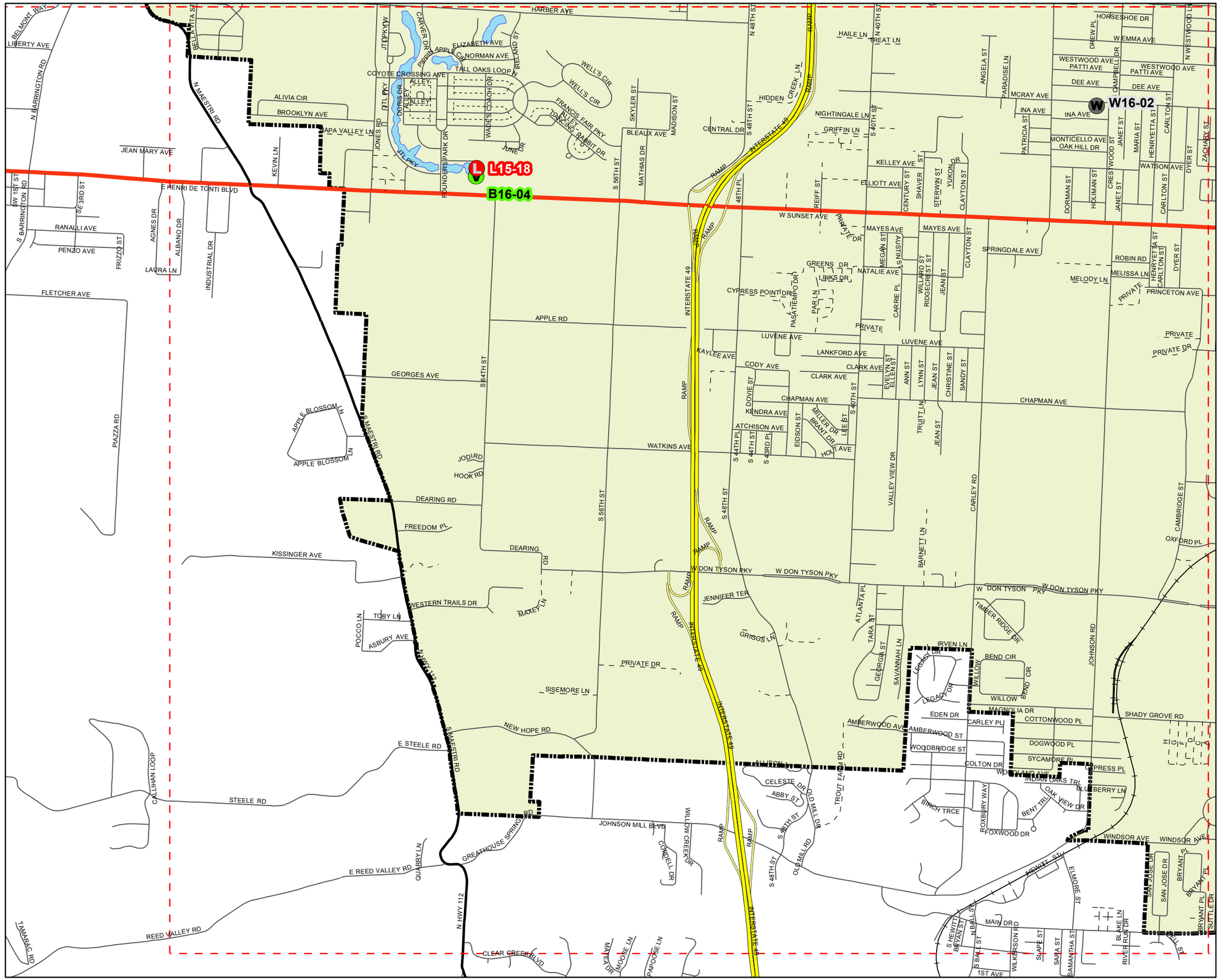

SHEET 3

- Z Rezoning Requests
- C Conditional Use Requests
- S Subdivisions (Prelim. & Final)
- R Replats
- L Large Scale Developments
- V Variance Requests
- LS Lot Splits
- W Waivers

CITY OF SPRINGDALE PLANNING COMMISSION AGENDA ITEMS JANUARY 5TH, 2016

N
W E
S

Feet
2,000 0 2,000

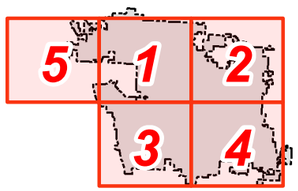

SHEET 4

- Z Rezoning Requests
- C Conditional Use Requests
- S Subdivisions (Prelim. & Final)
- R Replats
- L Large Scale Developments
- V Variance Requests
- LS Lot Splits
- W Waivers

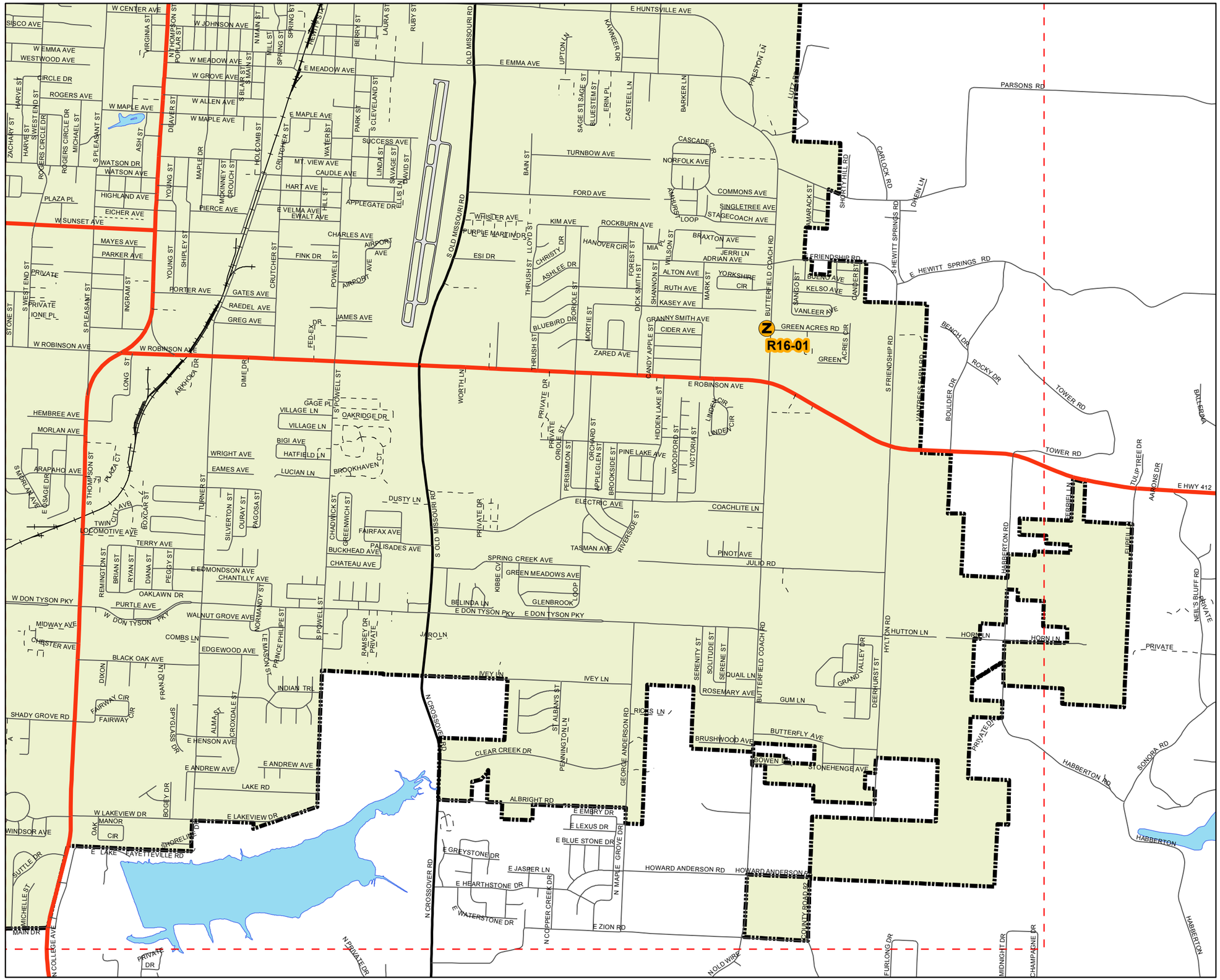

++++++

PLANNING & COMMUNITY DEVELOPMENT DIVISION

Memo

To: PLANNING COMMISSION MEMBERS

From: Patsy Christie, Planning Director

Date: January 5, 2016

Re: **R16-01** **Rezone**

A request by Joseph J. and Edna R. Wagy for Planning Commission approval of a zone change from Agricultural District (A-1) to General Commercial District (C-2) for a tract of land containing 2 acres.

LOT LOCATION AND SIZE

The 2 acre tract is located at 1660 Butterfield Coach Road, west side of Butterfield Coach Road across from Green Acres Road.

A vicinity map is attached.

EXISTING ZONING

The existing zoning on this tract is an A-1, Agricultural district. This district is designed to protect agricultural land until an orderly transition to urban development has been accomplished. It provides a usable district for certain uses which may be annexed to the city. The regulations of the agricultural district are designed to protect agricultural land until an orderly transition to urban development has been accomplished. This zone will encourage single family residential usage on large tracts. In addition, due to the low density of development, agricultural uses such as crop and livestock production are allowed.

Uses permitted: - 1, 6, 7, 8, 29
Conditional Uses Permitted on Appeal: - 2, 3, 4, 5, 9, 14, 17, 23, 28, 30, 33, 36, 37
Temporary Uses – 32, 34

ACCESSORY USES

The following accessory structures and land uses shall be permitted only where clearly incidental to the permitted primary use, except as otherwise permitted herein:

(1) Accessory buildings, including private garages, storage facilities and children's playhouses.
(2) Private greenhouses.
(3) Swimming pools, tennis courts and similar recreation facilities.

SITE PLAN REVIEW

When a conditional use is proposed in an A-1 district, except for Use Unit 28 home occupation and Use Unit 36, horses kept in residential areas; a site plan review shall be required. See Article 2, Section 13 of this chapter for the procedure and requirements of a site plan review.

AREA REGULATIONS

(1) LOT AREA. There shall be a lot area of not less than two acres for both residential and non-residential use. In addition, there shall be a minimum lot width of not less than two hundred (200) feet on a public street at the front setback line.
(2) DENSITY. One (1) unit per two acres.
(3) FRONT SETBACK. There shall be a front setback having a depth of not less than thirty-five (35) feet. In keeping with the definition of a corner lot, all sides adjacent to streets shall be required to have front setbacks of thirty-five (35) feet.
(4) SIDE SETBACK. There shall be a side setback on each side of the lot having a width of not less than twenty (20) feet.
(5) REAR SETBACK. There shall be a rear setback having a depth of not less than thirty-five (35) feet.

	LOT MINIMUMS		SETBACKS				
	Widths	Area	Front	Back	Side		
						Corner	
						Interior	Exterior
One Family	200	2 acre	35	35	20/20	20	35

REQUESTED ZONING

The requested zoning of this tract is a C-2 General Commercial District. The District is established in order to be a broader range of retail uses, which comprise the commercial function of the city including groupings of freestanding commercial structures. Permitted uses include most types of retail activity except those involving open displays of merchandise and those which generate large volumes of vehicular traffic or are otherwise incompatible with the purpose and intent of the C-2 general commercial district. Retail areas zoned C-2 shall be generally concentrated as to geographical configuration. It is anticipated, however, that in some situations, change to another commercial or office classification may be appropriate to permit the transition of strip retail areas to other productive forms of land use. It is the intent of these regulations that the C-2 district be concentrated at the intersections of arterial streets. Extension of the district along major arterial streets in linear fashion shall be discouraged.

Uses permitted: - 1, 4, 16, 17, 19, 20, 21, 22, 27, 32, 35
Conditional Uses Permitted on Appeal: - 2, 3, 12, 33

ACCESSORY USES

See Article 6 Section 3.1 of this chapter.

SITE PLAN REVIEW

When a conditional use is proposed in a C-2 district, except for home occupation a site plan review shall be required. See Article 2, Section 13 of this chapter for the procedure and requirements of a site plan review.

HEIGHT REGULATIONS

There shall be no maximum height limits in C-2 district; provided, however, that any building which exceeds the height of twenty (20) feet shall be set back from any boundary line of any residential district a distance of one (1) foot for each foot of height in excess of twenty (20) feet.

AREA REGULATIONS

SETBACKS:

Front setback	30'
Front setback if parking is allowed between R-O-W and the building	50'
Side setback (subject to applicable fire and building codes)	0
Side setback when contiguous to a residential district	20'
Rear setback	20'

GREENSPACE

Each developed lot shall provide and maintain:

1. A landscaped buffer, not less than ten (10) feet wide, along the front property line. When adjacent to the property line of a residential use a 5' landscaped area and a six (6) foot opaque screen shall be required.
2. Landscaping, including grass, shrubs and trees, and without structure or pavement, of a minimum of ten percent of the total surface area of the lot or development.

OFF-STREET PARKING

See Article 7 of this chapter.

SURROUNDING ZONING AND LAND USE

Zoning of the surrounded area is shown on the attached map. The tract contains a single family dwelling and accessory structures. The area to the north contains single family dwellings in SF-2 zoning. The area to the east contains single family dwellings in A-1 zoning. The area to the south is undeveloped in A-1 zoning. The area to the west is undeveloped in MF-4 zoning.

LAND USE PLAN AND MASTER STREET PLAN

The adopted Comprehensive Land Use Plan indicates commercial use.

The Master Street Plan indicates Butterfield Coach Road as a major collector.

STAFF COMMENTS AND RECOMMENDATIONS

The rezoning request is in keeping with the following goals and policies of the Comprehensive Land Use Plan and is recommended for approval:

Improve the City's economic base and tax structure through the promotion of healthy, stable commercial concentrations

Assure adequate land allocation for commercial areas of sufficient size and in proper locations

Encourage the development of a wide range of commercial development for the residents and tourist to include neighborhood, community and regional centers.

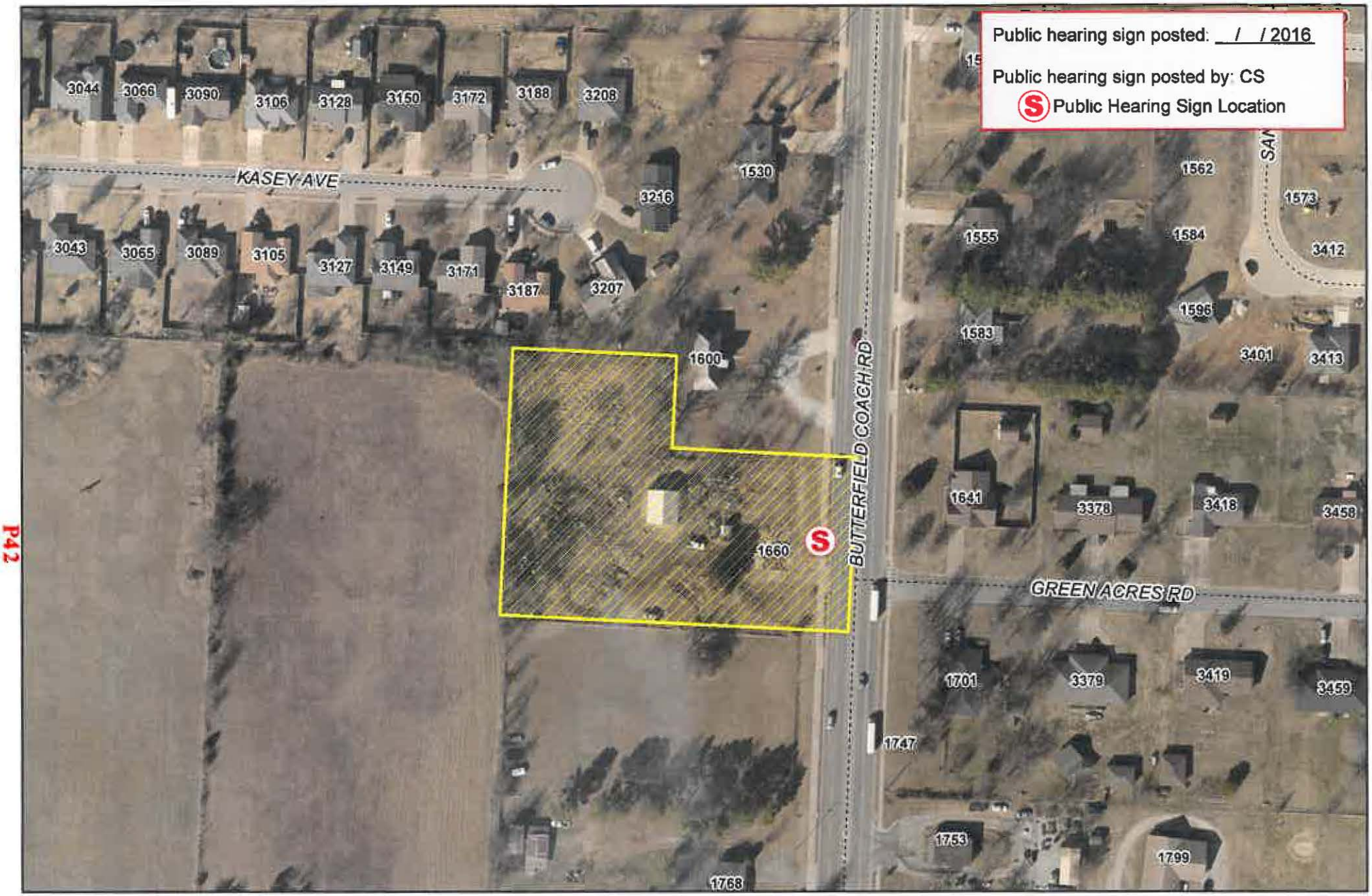

N

Feet
0 100 200

FILE NUMBER: R16-01
APPLICANT: JOSEPH & EDNA WAGY
REZONING REQUEST: A-1 TO C-2

CITY OF SPRINGDALE
PLANNING OFFICE
PLANNING COMMISSION MEETING

File No. R16-01

PETITION FOR REZONING

Petition is hereby made to the City Council of the City of Springdale, through the Springdale Planning Commission, pursuant to the provisions of Act 186 of 1957, as amended, and Chapter 130 of the City of Springdale Code of Ordinances, as amended, by Joseph J. WAGY & EDNA R. WAGY
The record property owner(s), petitioning to rezone the following described area:

Legal Description:

See ATTACHED
1) WARRANTY DEED (Exhibit A)
2) DRAWING (EXHIBIT B)

Layman's Description: 1660 Butterfield Coach Road

The **Petitioner** hereby states by oath that:

1. The Petitioner is the record title holder of the above described property evidenced by the attached copy of a **Warranty Deed** as Exhibit A.
2. A **scaled drawing** showing accurate dimensions, lot lines, surrounding zoning, adjacent owners, north arrow and graphic scale is attached as Exhibit B.
3. The names and address of all adjacent owners of the above described property **certified by a licensed abstractor or licensed land surveyor** within the past sixty (60) days are attached as evidenced by Exhibit C.

The **Petitioner** requests the following zoning classification:

FROM (current zoning) A-1

TO (proposed zoning) C-2

The **Petitioner's** immediate intentions are to:

1. **Sell** the property YES (Yes or No), and if so, is the property subject to an offer and acceptance, escrow contract, option agreement, other contract for conveyance of title YES (Yes or No).

2. **Develop** the property YES (Yes or No), and if so, the proposed use is Business with storage & parking.

3. **Effect** of the proposed zoning upon the adjacent property and neighborhood is anticipated to be as follows: Land use plan shows commercial use in this area.

The **Petitioner** understands that he/she is responsible to send a notice of the public hearing to owners of adjacent properties in accordance with the requirements set forth in the instruction given with this application and that an affidavit must be submitted with supporting documents no later than seven (7) calendar days prior to the meeting date. It is further understood that the cost of such notice(s) is borne by the Petitioner.

The **Petitioner** understands that he/she should be present at the meeting in order to answer questions. If the **Petitioner** is unable to attend, written authorization must be attached designating a representative and any decisions made by this individual shall be binding on the petitioner.

Authorized Representative: David L. Jorgensen

Address: 124 W. Sunbridge, Fayetteville, Ar 72703

PETITIONER/OWNER **SIGNATURE** Joseph J. Wagy w/sign

MAILING ADDRESS: 3330 Amberwood St., Springdale, AR 72762

TELEPHONE: 863-258-3091 DATE: 11-17-15

VERIFICATION

I/We, the undersigned, herewith state on solemn oath that we have read the above and foregoing application for rezoning and that all the facts, statements, and allegations therein contained are true and correct to the best of my knowledge and belief and that complete disclosure of all material facts have been made.

SIGNATURE
(Property Owner)

Sign

Joseph J Wagy ✓
(Property Owner)

State of Arkansas)
) ss.
County of Washington)

SUBSCRIBED AND SWORN TO before me, a Notary Public, this 18 day of November, 20 15.

OFFICIAL SEAL
TANIS JONES
NOTARY PUBLIC - ARKANSAS
MADISON COUNTY
#12371428
Commission Exp. 11-15-19

Tanis Jones
Notary Public

+++++

PLANNING & COMMUNITY DEVELOPMENT DIVISION

Memo

To: PLANNING COMMISSION MEMBERS

From: Patsy Christie, Planning Director

Date: January 5, 2016

Re: **R16-02 Rezone**

A request by Stefan K. and Toni Lea Cocklin for Planning Commission approval of a zone change from Agricultural District (A-1) to Thoroughfare Commercial District (C-5) for a tract of land containing 1.55 acres.

LOT LOCATION AND SIZE

The 1.55 acre tract is located at 4715 Seaton Drive, south side of Seaton Drive, east of N. 48th Street.

A vicinity map is attached.

EXISTING ZONING

The existing zoning on this tract is an A-1, Agricultural district. This district is designed to protect agricultural land until an orderly transition to urban development has been accomplished. It provides a usable district for certain uses which may be annexed to the city. The regulations of the agricultural district are designed to protect agricultural land until an orderly transition to urban development has been accomplished. This zone will encourage single family residential usage on large tracts. In addition, due to the low density of development, agricultural uses such as crop and livestock production are allowed.

Uses permitted: - 1, 6, 7, 8, 29
Conditional Uses Permitted on Appeal: - 2, 3, 4, 5, 9, 14, 17, 23, 28, 30, 33, 36, 37
Temporary Uses – 32, 34

ACCESSORY USES

The following accessory structures and land uses shall be permitted only where clearly incidental to the permitted primary use, except as otherwise permitted herein:

(1) Accessory buildings, including private garages, storage facilities and children's playhouses.
(2) Private greenhouses.
(3) Swimming pools, tennis courts and similar recreation facilities.

SITE PLAN REVIEW

When a conditional use is proposed in an A-1 district, except for Use Unit 28 home occupation and Use Unit 36, horses kept in residential areas; a site plan review shall be required. See Article 2, Section 13 of this chapter for the procedure and requirements of a site plan review.

AREA REGULATIONS

(1) LOT AREA. There shall be a lot area of not less than two acres for both residential and non-residential use. In addition, there shall be a minimum lot width of not less than two hundred (200) feet on a public street at the front setback line.
(2) DENSITY. One (1) unit per two acres.
(3) FRONT SETBACK. There shall be a front setback having a depth of not less than thirty-five (35) feet. In keeping with the definition of a corner lot, all sides adjacent to streets shall be required to have front setbacks of thirty-five (35) feet.
(4) SIDE SETBACK. There shall be a side setback on each side of the lot having a width of not less than twenty (20) feet.
(5) REAR SETBACK. There shall be a rear setback having a depth of not less than thirty-five (35) feet.

	LOT MINIMUMS		SETBACKS				
	Widths	Area	Front	Back	Side		
						Corner	
						Interior	Exterior
One Family	200	2 acre	35	35	20/20	20	35

REQUESTED ZONING

The requested zoning of this tract is a C-5 Thoroughfare Commercial District. The district is established in order to provide adequate locations for retail uses which serve the needs of the motoring public and are characterized by a high level of vehicular ingress and egress. Among these uses, transient sleeping accommodations and eating and drinking establishments. Such uses are not generally compatible with pedestrian-oriented commercial districts and shopping centers since they tend to obstruct and interfere with pedestrian movement. Appropriate locations for this district are along heavily traveled major traffic arterials.

Uses permitted: - 1, 4, 5, 16, 17, 18, 19, 20, 21, 22, 27, 31, 38
Conditional Uses Permitted on Appeal: - 2, 3, 12, 23,24, 30, 33, 35
Temporary Uses: - 32

DEVELOPMENT CRITERIA

i. All yards unoccupied by buildings or merchandise or used as traffic ways shall be landscaped with grass and shrubs and maintained in an orderly condition.

ii. All of the lot used for the parking of vehicles, for the storage and display of merchandise shall be paved with a sealed surface pavement and maintained in such a manner that no dust will be produced by continued use.

iii. All servicing of vehicles and assembly of equipment carried on as an incidental part of the sales operation shall be conducted within a completely enclosed building.

iv. No article or material stored or offered for sale in connection with the permitted or conditional uses listed herein shall be stored or displayed outside the confines of the building unless it is so screened by a permanent opaque screening fence or wall so that is cannot be seen from an adjoining lot. The following screening and display criteria shall apply to uses located in the C-5 open display district:

   b. Automobile, truck, tractor, mobile home, boat or motorcycle sales areas are not required to screen fully assembled merchandise that is ready for sale.
   c. No permanent open display will be permitted on sidewalks, or public right-of-way.
   d. Automobile service stations shall be permitted open display of merchandise commonly sold by such operations as long as the area of said display is not taller than the building nor larger than an area equal to one-half of the façade areas of the front of the building.
   e. Automobile service stations may be used for the storage of rental trucks or trailers, provided, however, the storage space shall be paved, shall not exceed four thousand (4,000) square feet in area and the above screening requirements are met.

i. There shall be no open display of any kind whatsoever in the first twenty (20) feet of the required front yard setback.

ACCESSORY USES

See Article 6 Section 3.1 of this chapter.

SITE PLAN REVIEW

When a conditional use is proposed in a C-5 district a site plan review shall be required. See Article 2, Section 13 of this chapter for the procedure and requirements of a site plan review.

HEIGHT REGULATIONS

There shall be no maximum height limits in C-5 district; provided, however, that any building which exceeds the height of twenty (20) feet shall be set back from any boundary line of any residential district a distance of one (1) foot for each foot of height in excess of twenty (20) feet.

AREA REGULATIONS

There shall be a minimum lot area of fourteen thousand (14,000) square feet. In addition, there shall be a lot width of not less than one hundred (100) feet.

SETBACKS:

Front setback	30'	
Front setback if parking is allowed between R-O-W and the building	50'	
Side setback	0	(subject to applicable fire and building codes)
Side setback when contiguous to a residential district	20'	
Rear setback	20'	

GREENSPACE

Each developed lot shall provide and maintain:

1. A landscaped buffer, not less than ten (10) feet wide, along the front property line. When adjacent to the property line of a residential use a 5' landscaped area and a six (6) foot opaque screen shall be required.
2. Landscaping, including grass, shrubs and trees, and without structure or pavement, of a minimum of ten percent of the total surface area of the lot or development.

OFF-STREET PARKING

See Article 7 of this chapter.

SURROUNDING ZONING AND LAND USE

Zoning of the surrounded area is shown on the attached map. The tract contains a single family dwelling. The area to the north is undeveloped and recently rezoned to MF-2. The area to the east and south contain a duplex and single family dwellings in A-1 zoning. The area to the west contains a single family dwelling in C-5 zoning.

LAND USE PLAN AND MASTER STREET PLAN

The adopted Comprehensive Land Use Plan indicates regional commercial use.

The Master Street Plan indicates Seaton Drive as a local street.

STAFF COMMENTS AND RECOMMENDATIONS

The rezoning request is in keeping with the following goals and policies of the Comprehensive Land Use Plan and is recommended for approval:

Improve the City's economic base and tax structure through the promotion of healthy, stable commercial concentrations

Assure adequate land allocation for commercial areas of sufficient size and in proper locations

Encourage the development of a wide range of commercial development for the residents and tourist to include neighborhood, community and regional centers.

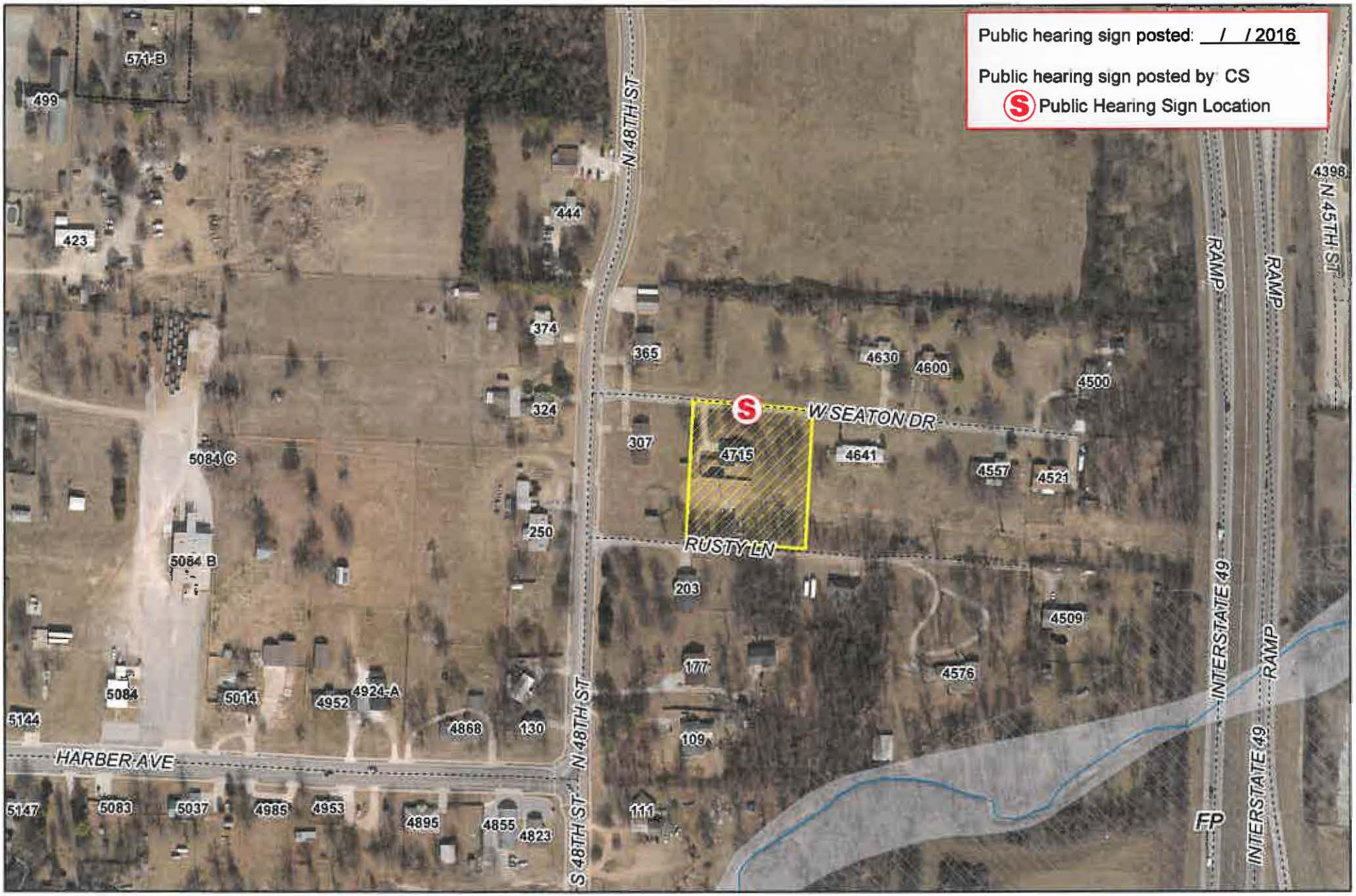

P50

Feet
0 100 200
N

FILE NUMBER: R16-02
APPLICANT: STEFAN & TONI COCKLIN
REZONING REQUEST: A-1 TO C-5

CITY OF SPRINGDALE
PLANNING OFFICE
PLANNING COMMISSION MEETING

File No. R16-02

PETITION FOR REZONING

Petition is hereby made to the City Council of the City of Springdale, through the Springdale Planning Commission, pursuant to the provisions of Act 186 of 1957, as amended, and Chapter 130 of the City of Springdale Code of Ordinances, as amended, by STEFAN K. COCKLIN & TONI LEA COCKLIN
The record property owner(s), petitioning to rezone the following described area:

Legal Description:

Part of the NW-1/4 of the SE-1/4 of Section 33, Township 18 North, Range 30 West, Washington County, Arkansas, being more particularly described as follows: Beginning at a point 495.67 feet North and South 88 degrees 35'52" East 177.05 feet from the Southwest corner of said forty acre tract; thence North 279.77 feet; thence South 88 degrees 35'52" East 165.12 feet; thence South 86 degrees 27'55" East 76.48 feet; thence South 276.92 feet to a found iron pin; thence North 88 degrees 45'24" West 241.40 feet to the Point of Beginning, containing 1.55 acres, more or less and subject to the right-of-way of a county road along the North boundary thereof.

Layman's Description: 4715 WEST SEATON DRIVE

The **Petitioner** hereby states by oath that:

1. The Petitioner is the record title holder of the above described property evidenced by the attached copy of a **Warranty Deed** as Exhibit A.
2. A **scaled drawing** showing accurate dimensions, lot lines, surrounding zoning, adjacent owners, north arrow and graphic scale is attached as Exhibit B.
3. The names and address of all adjacent owners of the above described property **certified by a licensed abstractor or licensed land surveyor** within the past sixty (60) days are attached as evidenced by Exhibit C.

The **Petitioner** requests the following zoning classification:

FROM (current zoning) A-1

TO (proposed zoning) C-5

The **Petitioner's** immediate intentions are to:

1. **Sell** the property YES (Yes or No), and if so, is the property subject to an offer and acceptance, escrow contract, option agreement, other contract for conveyance of title NO (Yes or No).

2. **Develop** the property NO (Yes or No), and if so, the proposed use is _____.

3. **Effect** of the proposed zoning upon the adjacent property and neighborhood is anticipated to be as follows: NO ANTICIPATED EFFECT. This property adjoins C-5 zoned property to the WEST.

The **Petitioner** understands that he/she is responsible to send a notice of the public hearing to owners of adjacent properties in accordance with the requirements set forth in the instruction given with this application and that an affidavit must be submitted with supporting documents no later than seven (7) calendar days prior to the meeting date. It is further understood that the cost of such notice(s) is borne by the Petitioner.

The **Petitioner** understands that he/she should be present at the meeting in order to answer questions. If the **Petitioner** is unable to attend, written authorization must be attached designating a representative and any decisions made by this individual shall be binding on the petitioner.

Authorized Representative:_____

Address:_____

PETITIONER/OWNER**SIGNATURE**

MAILING ADDRESS: 4715 WEST SEATON DRIVE, SPRINGDALE, AR. 72762

TELEPHONE: (479) 422-2099 DATE:_____

VERIFICATION

I/We, the undersigned, herewith state on solemn oath that we have read the above and foregoing application for rezoning and that all the facts, statements, and allegations therein contained are true and correct to the best of my knowledge and belief and that complete disclosure of all material facts have been made.

SIGNATURE
(Property Owner)
Steve K. Gall
Joni Cocklin
(Property Owner)

State of Arkansas)
) ss.
County of Washington)

SUBSCRIBED AND SWORN TO before me, a Notary Public, this 9th day of DECEMBER, 2015.

CHELSEA HAND
Commission No. 12381026
NOTARY PUBLIC
My Commission Expires Feb 22, 2022
BENTON CO., ARKANSAS

Notary Public

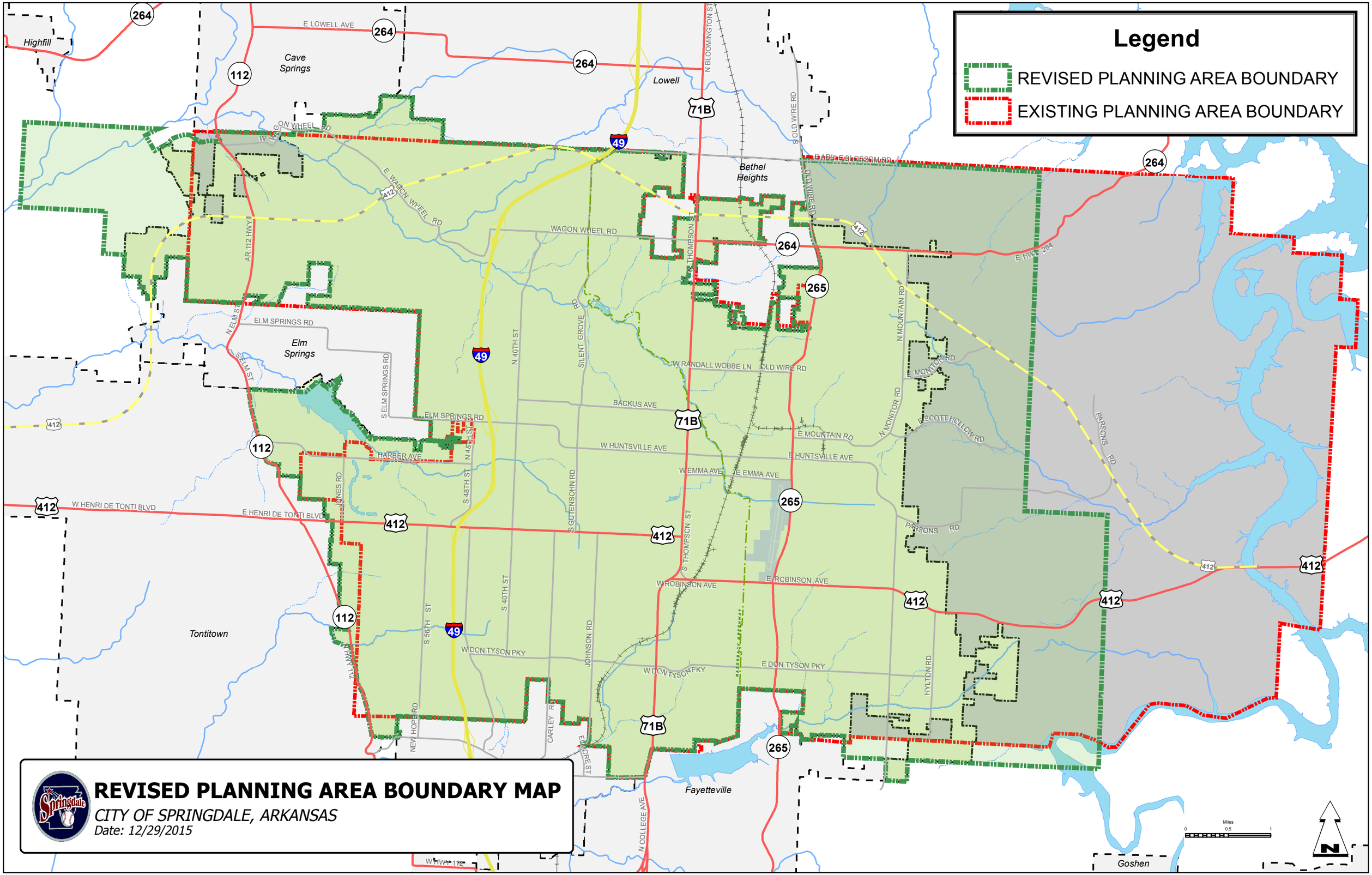
Legend
REVISED PLANNING AREA BOUNDARY
EXISTING PLANNING AREA BOUNDARY
Highfill
Cave Springs
Lowell
Bethel Heights
Elm Springs
Tontitown
Fayetteville
Goshen
E LOWELL AVE
N BLOOMINGTON ST
OLD WIRE RD
W WAGON WHEEL RD
E WAGON WHEEL RD
WAGON WHEEL RD
E HWY 264
AR 112 HWY
N ELM ST
S ELM ST
ELM SPRINGS RD
S ELM SPRINGS RD
N 40TH ST
SILENT GROVE RD
N THOMPSON ST
W RANDALL WOBBE LN
OLD WIRE RD
N MOUNTAIN RD
N MONITOR RD
BACKUS AVE
E MOUNTAIN RD
PRESCOTT HOLLOW RD
W HUNTSVILLE AVE
E HUNTSVILLE AVE
HARBER AVE
N 48TH ST
W EMMA AVE
E EMMA AVE
PARSONS RD
JONES RD
S GUTENSOHN RD
W HENRI DE TONTI BLVD
E HENRI DE TONTI BLVD
S THOMPSON ST
W ROBINSON AVE
E ROBINSON AVE
S 40TH ST
S 56TH ST
W DON TYSON PKY
E DON TYSON PKY
JOHNSON RD
HYLTON RD
NEW HOPE RD
CARLEY RD
ELMORE ST
N COLLEGE AVE
Miles
0
0.5
1
N
REVISED PLANNING AREA BOUNDARY MAP
CITY OF SPRINGDALE, ARKANSAS
Date: 12/29/2015

Planning and Community Development Division
City of Springdale

Memo

To: Planning Commission

From: Staff

Date: January 5, 2016

RE: **L15-18** **Large Scale Development** **Lakeside at Har-Ber**

Variance (B16-04) for modification of Multi-family design standards
Variance (B16-04) for modification of landscaping requirements per Chapter 56

Planning Comments

1) Submit the approved authorization of representation form, if property owner will not be present at Planning Commission meeting.
2) Multi-family play area is required by Ordinance. 125 square feet per bedroom.
3) Perimeter landscaping is required in accordance with Chapter 56.
4) All comments from the utility companies and other city departments must be addressed prior to approval of construction plans.

Multi-family Design Standards

a. 20% Common Open Space
    a. The following areas are not allowed as part of common open space:
        i. Private lots, balconies and patios dedicated for use by a specific unit
        ii. Public right-of-way or private streets and drives
        iii. Open parking areas and driveways for dwellings
        iv. Land covered by structures except for ancillary structures associated with the use of open space.
        v. Designated outdoor storage areas
        vi. Land areas between buildings of less than 40'.

vii. Strips along buildings, sidewalks, streets, parking lots and property lines less than 25' in any dimension.
viii. Required perimeter setbacks
ix. Detention/retention facilities, including drainage swales, except as permitted (on page 6).

b. Common open space shall contain at least three of the following features:
   i. Seasonal planting areas
   ii. Adequate large trees
   iii. Adequate seating
   iv. Pedestrian-scaled lighting
   v. Gazebos or other decorative shelters
   vi. Adequate plat structures for children
   vii. On-site community recreation amenities.

b. Amenities Required
   a. Multi-family developments with 5-25 dwelling units – 1 amenity; 25-150 dwelling units – 2 amenities; 150+ - 3 amenities, and an additional one (1) amenity for each 150 units.
   b. Amenities cannot be duplicated until 3 different ones have been used.
   c. See page 9 for approved amenities.

Engineering Comments

5) Sect 107 The site area of disturbance is between 0.5 and 1 acre. A storm Water Pollution Prevention Plan, Grading Permit Application and $250.00 fee, in accordance with Chapter 107, must be submitted to the Planning Office prior to final approval of construction plans. See Applications & Forms / Grading at http://www.springdalear.gov/department/planning_and_community_development/

1 EAST ELEVATION
1/8" = 1'-0"

2 WEST ELEVATION
1/8" = 1'-0"

3 NORTH ELEVATION
1/8" = 1'-0"

4 SOUTH ELEVATION
1/8" = 1'-0"

9/15/2015 4:17:53 PM

HART
CONSTRUCTION, LLC.
GENERAL CONTRACTORS

O: 501.279.2493
F: 501.279.1562

100 SOUTH MAIN STREET
SEARCY, ARKANSAS 72143

WWW.HARTCONLLC.COM

NOT FOR CONSTRUCTION
Joshua W. Stewart
- Architect

LAKESIDE AT HAR-BER MEADOWS

Lynch's Prairie Court
Springdale, Arkansas

L15-18

Project number: - - - - -
Date: 15 September, 2015
Revisions:

PRELIMINARY ELEVATIONS

A1

LAKESIDE AT HAR-BER

SPRINGDALE, ARKANSAS

LARGE SCALE DEVELOPMENT PLAN L15-18

INDEX OF DRAWINGS

01	COVER SHEET
02	SITE + UTILITY PLAN
03	GRADING AND DRAINAGE PLAN
04	LANDSCAPE PLAN
05	LIGHTING PLAN
06-08	DETAIL SHEETS

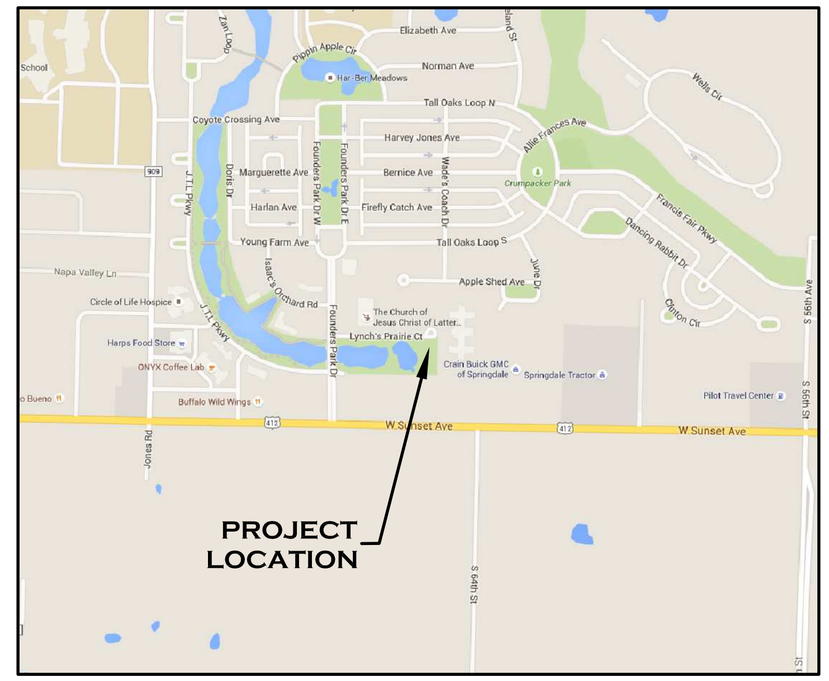

VICINITY MAP
N.T.S.

NORTH

PARCEL NUMBERS: 815-34044-100

PROJECT SITE ADDRESS: LYNCH'S PRAIRIE COURT
SPRINGDALE, ARKANSAS

ZONING CLASSIFICATION: PUD

PROPOSED USE: CONDOMINIUMS (10 UNITS)

OWNER: JONES TRUST
922 E EMMA AVE
SPRINGDALE AR, 72768

DEVELOPER: MIKE PENNINGTON
GATEWAY HOMES, LLC
P.O. BOX 6095
SPRINGDALE, AR 72766
PHONE: (479) 957-5422

CONTRACTOR/ARCHITECT: HART CONSTRUCTION
100 SOUTH MAIN ST
SEARCY, AR 72143
PHONE: (501) 279-2493
FAX: (501) 279-1562

ENGINEER/SURVEYOR: BATES & ASSOCIATES, INC.
91 W. COLT SQUARE SUITE 3
FAYETTEVILLE, AR 72703
PHONE: (479) 442-9350
FAX: (479) 521-9350

GENERAL NOTES TO CONTRACTOR

1. THE CONTRACTOR IS SPECIFICALLY CAUTIONED THAT THE LOCATION AND/OR ELEVATION OF EXISTING UTILITIES AS SHOWN ON THESE PLANS IS BASED ON RECORDS OF THE VARIOUS UTILITY COMPANIES, AND WHERE POSSIBLE, MEASUREMENTS TAKEN IN THE FIELD. THE INFORMATION IS NOT TO BE RELIED ON AS BEING EXACT OR COMPLETE. THE CONTRACTOR MUST CONTACT THE APPROPRIATE UTILITY COMPANIES AT LEAST 72 HOURS BEFORE ANY EXCAVATION TO REQUEST EXACT FIELD LOCATION OF UTILITIES. IT SHALL BE THE CONTRACTOR'S RESPONSIBILITY TO RELOCATE UTILITIES WHICH CONFLICT WITH THE PROPOSED IMPROVEMENTS SHOWN ON THE PLANS.
2. CONTRACTOR SHALL VERIFY HORIZONTAL AND VERTICAL LOCATION OF ALL EXISTING UTILITIES PRIOR TO STARTING CONSTRUCTION.
3. EXISTING GRADE CONTOURS ARE AT ONE FOOT INTERVALS.
4. PROPOSED CONTOURS ARE AT FINISH GRADE AND ARE AT ONE FOOT INTERVALS.
5. PROPOSED SPOT ELEVATIONS ARE TOP OF FINISH CURB UNLESS OTHERWISE INDICATED OR SHOWN.
6. THE CONTRACTOR SHALL ADHERE TO ALL TERMS AND CONDITIONS AS OUTLINED IN THE STORMWATER POLLUTION PREVENTION PLAN.
7. CONTRACTOR TO INSTALL MUD ABATEMENT ENTRANCES ANYWHERE PROPOSED STREETS ENTER EXISTING PUBLIC STREETS. ENTRANCE TO BE CONSTRUCTED A MIN. OF 50' IN LENGTH BY WIDTH OF PROPOSED STREET AND TO A DEPTH OF 8 INCHES.
8. CONTRACTOR TO INSTALL EROSION CONTROL FENCING PRIOR TO BEGINNING ANY CONSTRUCTION. FENCING SHALL BE MAINTAINED & REPAIRED AS NECESSARY BY THE CONTRACTOR DURING CONSTRUCTION.
9. CONTRACTOR SHALL ASSURE POSITIVE DRAINAGE AWAY FROM BUILDINGS FOR ALL NATURAL AND PAVED AREAS.
10. CONTRACTOR SHALL ADJUST AND/OR NEATLY CUT EXISTING PAVEMENT TO ASSURE A SMOOTH FIT AND TRANSITION.
11. ALL CONCRETE TO HAVE A MINIMUM 28 DAY COMPRESSION STRENGTH OF 3500 PSI.
12. DAMAGE DURING CONSTRUCTION TO ANY EXISTING STRUCTURES TO REMAIN SHALL BE THE CONTRACTOR'S RESPONSIBILITY TO REPAIR AND/OR REPLACE.
13. THE CONSTRUCTION AND INSTALLATION OF WATER AND SANITARY SEWER UTILITIES SHALL BE IN COMPLIANCE WITH THE CITY OF SPRINGDALE'S WATER AND SEWER SPECIFICATIONS, PROCEDURES AND DETAILS.
14. ALL MATERIALS AND CONSTRUCTION SHALL COMPLY WITH THE CITY OF SPRINGDALE'S REQUIREMENTS. IN THE CASE OF CONFLICTS, THE CITY'S CRITERIA SHALL GOVERN.
15. ALL SIDEWALKS AND HANDICAP RAMPS SHALL BE BUILT TO THE CURRENT STANDARDS OF THE AMERICANS WITH DISABILITIES ACT REQUIREMENTS.
16. IN ALL RESIDENTIAL, COMMERCIAL AND INDUSTRIAL DEVELOPMENTS SUBMITTED AFTER AUGUST 30, 2007, ALL UTILITY WIRES, LINES, AND/OR CABLE IN SAID DEVELOPMENTS UTILIZED BY ELECTRIC AND/OR TELECOMMUNICATIONS COMPANIES SHALL BE PLACED UNDERGROUND. EXCLUDING 12KV AND ABOVE.

BASIS OF ELEVATION:
BM C-13 (PER FINAL PLAT)

BASIS OF BEARING:
REPLAT OF BLOCK 43, HAR-BER MEADOWS PLANNED UNIT DEVELOPMENT PHASE 9, FILED IN PLAT BOOK 23 AT PAGE 89

SITE AREA INFORMATION

GROSS SITE AREA	42,324 SQ FT
SITE AREA IN RIGHT OF WAY	0 SQ FT
NET SITE AREA	42,324 SQ FT

GREENSPACE CALCULATIONS:

TOTAL AREA OF SITE	42,324 SQ FT
PROPOSED IMPERMEABLE AREA	19,598 SQ FT
POST-DEVELOPED GREENSPACE	22,276 SQ FT
TOTAL PERCENTAGE GREENSPACE:	52.6%

BUILDING SETBACKS (PER PLAT):

FRONT SETBACK	5 FEET
SIDE SETBACK	15 FEET
REAR SETBACK	70 FEET

BUILDING AREA INFORMATION:

10 TWO-BEDROOM UNITS

4 UNITS @ 1,290 SF
6 UNITS @ 1,051 SF

TOTAL HEATED AND COOLED AREA - 15,226 SF
FIRST FLOOR FOOTPRINT - 17,490

PARKING REQUIREMENTS:

ARTICLE X, SECTION 6, DECLARATION OF COVENANTS, CONDITIONS AND RESTRICTIONS FOR HAR-BER MEADOWS PLANNED UNIT DEVELOPMENT. (BOOK 96, PAGE 35562)

RESIDENTIAL - HIGH DENSITY (APARTMENTS OR CONDOMINIUMS) - 1.5 SPACES PER UNIT PLUS 10% OF TOTAL UNITS FOR GUESTS

NUMBER OF DWELLING UNITS:	10
PARKING SPACES REQUIRED:	17
STANDARD SPACES PROVIDED:	17
HANDICAP SPACES REQUIRED:	1
HANDICAP SPACES PROVIDED:	1
TOTAL PARKING SPACES PROVIDED:	18

FLOOD CERTIFICATION:

NO PORTION OF THIS PROPERTY IS LOCATED WITHIN FLOOD ZONE "A" OR "AE" AS DETERMINED BY THE NATIONAL FLOOD INSURANCE PROGRAM FLOOD INSURANCE RATE MAP FOR BENTON COUNTY, ARKANSAS.
(FIRM PANEL #05143C0065F. DATED 05/16/2008)

SURVEY DESCRIPTION:
(PARCEL #815-34004-100)

LOT 2 OF THE REPLAT OF BLOCK 43, HAR-BER MEADOWS PLANNED UNIT DEVELOPMENT PHASE IX IN THE CITY OF SPRINGDALE, ARKANSAS AS PER PLAT OF SAID SUBDIVISION ON FILE IN THE OFFICE OF THE CIRCUIT CLERK AND EX-OFFICIO RECORDER OF WASHINGTON COUNTY, ARKANSAS. SUBJECT TO ALL EASEMENTS AND RIGHT-OF-WAY OF RECORD.

GENERAL SURVEY NOTE:

THE UNDERGROUND UTILITIES SHOWN HAVE BEEN LOCATED FROM FIELD SURVEY INFORMATION AND EXISTING DRAWINGS THE SURVEYOR MAKES NO GUARANTEES THAT THE UNDERGROUND UTILITIES SHOWN ARE IN THE EXACT LOCATION INDICATED, ALTHOUGH THE SURVEYOR DOES CERTIFY THAT THEY ARE LOCATED AS ACCURATELY AS POSSIBLE FROM INFORMATION AVAILABLE. THE SURVEYOR HAS NOT PHYSICALLY LOCATED THE UNDERGROUND UTILITIES.

LEGEND

PROPOSED	EXISTING	DESCRIPTION
		ASPHALT (EDGE)
		ASPHALT (SURFACE)
		BUILDING
		BUILDING SETBACK LINE
o	o	BOLLARD
UGTV	UGTV	CABLE TV (UNDERGROUND)
	OHTV	CABLE TV (OVERHEAD)
		CENTERLINE
		CONCRETE SURFACE
		CONDUIT
1255	1255	CONTOURS
		CURB & GUTTER
UGE	UGE	ELECTRICAL (UNDERGROUND)
OHE	OHE	ELECTRICAL (OVERHEAD)
		ELECT. TRANSFORMER
		EASEMENT
	X	FENCE (WIRE/WOOD/CHAIN)
	FO	FIBER OPTIC CABLE
		FIRE HYDRANT ASSEMBLY
		FLOWLINE
FM	FM	FORCE MAIN
GAS	GAS	GAS MAIN
		GAS METER
		GRAVEL SURFACE (EDGE)
		GRAVEL SURFACE
		IRON PIN (5/8" RE-BAR)
		LIGHT
		MONUMENT (CONCRETE)
		POND
		POWER POLE
		PROPERTY LINE (EXTERNAL)
		RETAINING WALL
		RIGHT-OF-WAY
8"SS	8"SS	SANITARY SEWER PIPE
		SANITARY SEWER MANHOLE
		SANITARY SEWER SERVICE
		SECTION LINE
		SIDEWALK
		SIGN
		SILT FENCE
		SPOT ELEVATION
		STORM SEWER PIPE
		STORM SEWER INLET
		STORM SEWER BALES
		TELEPHONE PED/MANHOLE
UGT	UGT	TELEPHONE (UNDERGROUND)
	OHT	TELEPHONE (OVERHEAD)
		TREE LINE CANOPY
		TREE/TREE TO BE REMOVED
		UTILITY EASEMENT
8"W	8"W	WATER MAIN PIPE
		WATER VALVE
		WATER METER
		WATER THRUST BLOCK
		WATER MAIN REDUCER
		WATER MAIN BLOWOFF VALVE

UTILITY CONTACT INFORMATION

CABLE: COX COMMUNICATIONS
JASON COMBS / MICHAEL MOORE
4901 S. 48th STREET
SPRINGDALE, AR 72762
PHONE: (479) 717-3730

CITY: CITY OF SPRINGDALE
ENGINEERING/PLANNING
201 SPRING STREET
SPRINGDALE, AR 72764
PHONE: (479) 750-8550

ELECTRIC: AEP/SWEPCO
NANCY S. GUISINGER
101 W. TOWNSHIP STREET
FAYETTEVILLE, AR 72703
PHONE: (479) 225-0813

FIRE: CITY OF SPRINGDALE
417 HOLCOMB STREET
SPRINGDALE, AR 72764
PHONE: (479) 750-4510

GAS: SOURCE GAS
655 E. MILLSAP DRIVE
FAYETTEVILLE, AR 72703
PHONE: (800) 563-0012

TELEPHONE: SOUTHWESTERN BELL
SUE CLOUSER
FAYETTEVILLE, AR 72701
PHONE: (479) 442-3107

WATER & GAS: SPRINGDALE WATER UTILITIES
RICK RUSSELL
526 OAK AVE.
SPRINGDALE, AR 72764
PHONE: (479) 571-5751

WASTE: WASTE MANAGEMENT
11979 ARBOR ACRES RD.
FAYETTEVILLE, AR 72701
PHONE: (800) 443-5558

CALL BEFORE YOU DIG! ARKANSAS ONE CALL 1-800-482-8998

OWNERSHIP OF DOCUMENTS

THIS DOCUMENT, AND THE IDEAS AND DESIGNS INCORPORATED HEREIN, AS AN INSTRUMENT OF PROFESSIONAL SERVICES, IS THE PROPERTY OF BATES + ASSOCIATES, INC., AND IS NOT TO BE USED, IN WHOLE OR PART, FOR ANY OTHER PROJECT WITHOUT THE WRITTEN AUTHORIZATION OF BATES + ASSOCIATES, INC.

SAFETY NOTICE TO CONTRACTOR

IN ACCORDANCE WITH GENERALLY ACCEPTED CONSTRUCTION PRACTICES, THE CONTRACTOR WILL BE SOLELY AND COMPLETELY RESPONSIBLE FOR CONDITIONS OF THE JOB SITE, INCLUDING SAFETY OF ALL PERSONS AND PROPERTY DURING PERFORMANCE OF THE WORK. THIS REQUIREMENT WILL APPLY CONTINUOUSLY AND NOT BE LIMITED TO NORMAL WORKING HOURS.

THE DUTY OF THE ENGINEER TO CONDUCT CONSTRUCTION REVIEW OF THE CONTRACTOR'S PERFORMANCE IS NOT INTENDED TO INCLUDE REVIEW OF THE ADEQUACY OF THE CONTRACTOR'S SAFETY MEASURES, IN, OR NEAR THE CONSTRUCTION SITE.

ENGINEER'S NOTICE TO CONTRACTOR

THE EXISTENCE AND LOCATION OF ANY UNDERGROUND UTILITY PIPES OR STRUCTURES SHOWN ON THESE DRAWINGS ARE OBTAINED BY A SEARCH OF THE AVAILABLE RECORDS. TO THE BEST OF OUR KNOWLEDGE THERE ARE NO EXISTING UTILITIES EXCEPT AS SHOWN ON THESE DRAWINGS AND WE ASSUME NO RESPONSIBILITY AS TO THE ACCURACY OF THEIR DEPICTED LOCATION ON THESE DRAWINGS. THE CONTRACTOR IS REQUIRED TO TAKE DUE PRECAUTIONARY MEASURES TO PROTECT THE UTILITY LINES SHOWN, AND ALL OTHER LINES NOT OF RECORD OR NOT SHOWN ON THESE DRAWINGS BY VERIFICATION OF THEIR LOCATION IN THE FIELD PRIOR TO THE INITIATION OF THE ACTUAL PORTION OF THEIR WORK.

STATE OF ARKANSAS
REGISTERED PROFESSIONAL ENGINEER
No. 9810
GEOFFREY H. BATES

CERTIFICATE OF AUTHORIZATION
BATES & ASSOCIATES, INC.
#1335
ARKANSAS ENGINEER

ENGINEER: G. Bates
DRAWN BY: J. Young

Copyright 2015, Bates and Associates, Inc.

REVISIONS	DATE
FIRST SUBMITTAL	08/26/15
REVISIONS PER 9/10/15 TECHNICAL PLAT REVIEW	09/17/15

LAKESIDE AT HAR-BER
LARGE SCALE DEVELOPMENT PLANS
L15-18
COVER SHEET
SPRINGDALE, ARKANSAS

Bates & Associates, Inc.
Civil Engineering & Surveying
www.nwbatesinc.com
91 W. Colt Square Dr. Suite 3
Fayetteville, Arkansas 72703
Phone - 479.442.9350 Fax 479.521.9350

PROJECT NO
15-201

DRAWING NO
01

Time: 12:23 pm Date: 8/26/2015
Drawing Name: 15\200\15-201\engineering\01 Cover.dwg Scale: 1=1 (PS) Xrefs Used: COA BBA, BATES-AR, 24X36

Time: 12:23 pm
Scale: 1=50 (PS)
Date: 8/26/2015
Drawing Name: 15\200\15-201\engineering\02 Site Plan.dwg
Xrefs Used: 24X36, base, COA BBA, BATES-AR

BUILDING AREA INFORMATION:

10 TWO-BEDROOM UNITS

4 UNITS @ 1,290 SF
6 UNITS @ 1,051 SF

TOTAL HEATED AND COOLED AREA – 15,226 SF
FIRST FLOOR FOOTPRINT – 17,490

PARKING REQUIREMENTS:

ARTICLE X, SECTION 6, DECLARATION OF COVENANTS, CONDITIONS AND RESTRICTIONS FOR HAR-BER MEADOWS PLANNED UNIT DEVELOPMENT. (BOOK 96, PAGE 35562)

RESIDENTIAL – HIGH DENSITY (APARTMENTS OR CONDOMINIUMS) – 1.5 SPACES PER UNIT PLUS 10% OF TOTAL UNITS FOR GUESTS

NUMBER OF DWELLING UNITS:	10
PARKING SPACES REQUIRED:	17
STANDARD SPACES PROVIDED:	17
HANDICAP SPACES REQUIRED:	1
HANDICAP SPACES PROVIDED:	1
TOTAL PARKING SPACES PROVIDED:	18

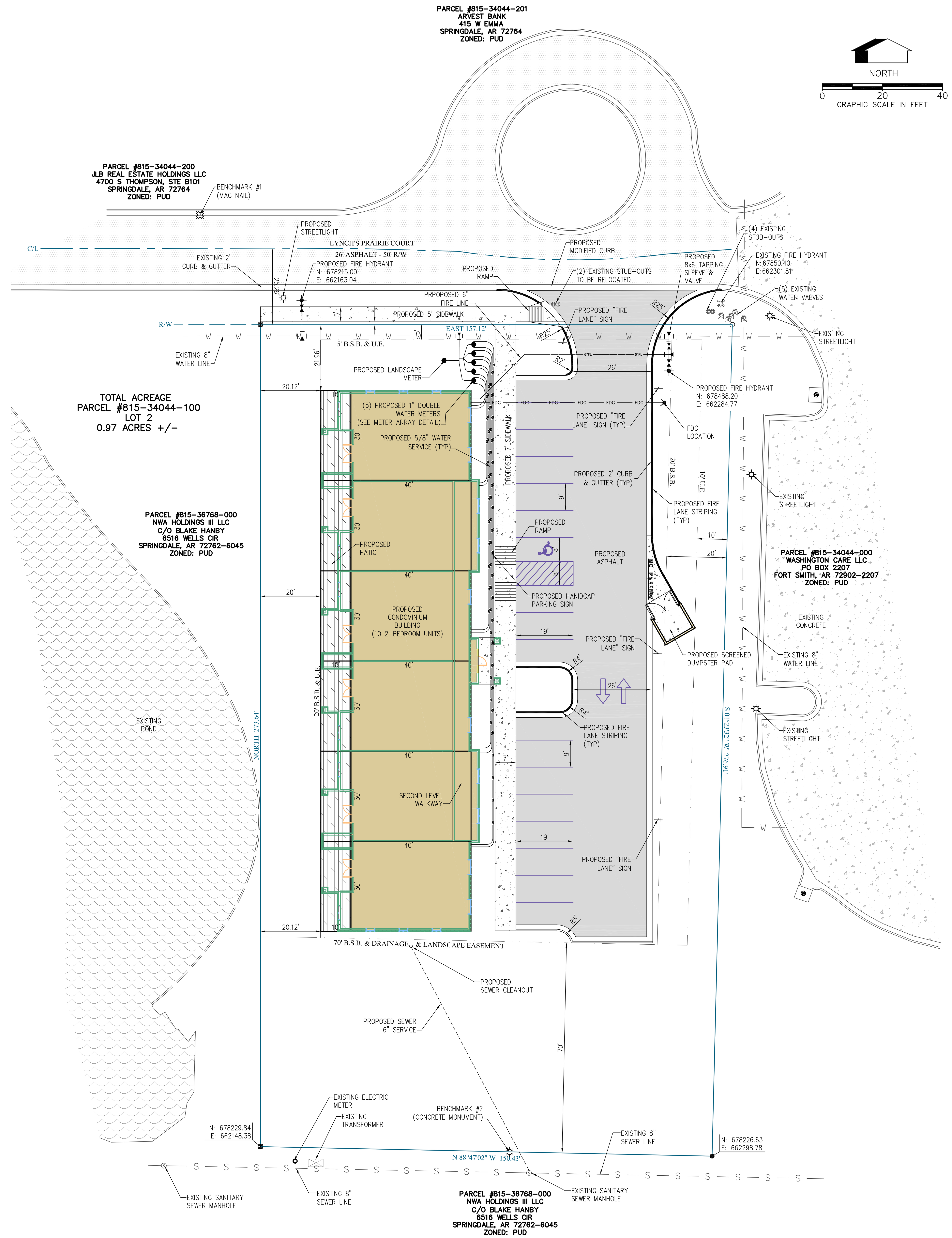

LEGEND		
PROPOSED	EXISTING	DESCRIPTION
		ASPHALT (EDGE)
		ASPHALT (SURFACE)
		BUILDING
		BUILDNG SETBACK LINE
		BOLLARD
UGTV	UGTV	CABLE TV (UNDERGROUND)
	OHTV	CABLE TV (OVERHEAD)
		CENTERLINE
		CONCRETE SURFACE
		CONDUIT
1255	1255	CONTOURS
		CURB & GUTTER
UGE	UGE	ELECTRICAL (UNDERGROUND)
OHE	OHE	ELECTRICAL (OVERHEAD)
		ELECT. TRANSFORMER
		EASEMENT
		FENCE (WIRE/WOOD/CHAIN)
	FO	FIBER OPTIC CABLE
		FIRE HYDRANT ASSEMBLY
		FLOWLINE
FM	FM	FORCE MAIN
GAS	GAS	GAS MAIN
G	G	GAS METER
		GRAVEL SURFACE (EDGE)
		GRAVEL SURFACE
		IRON PIN (5/8" RE-BAR)
		LIGHT
		MONUMENT (CONCRETE)
		POND
		POWER POLE
		PROPERTY LINE (EXTERNAL)
		RETAINING WALL
		RIGHT-OF-WAY
0"SS	8"SS	SANITARY SEWER PIPE
S	S	SANITARY SEWER MANHOLE
		SANITARY SEWER SERVICE
		SECTION LINE
		SIDEWALK
		SIGN
		SILT FENCE
		SPOT ELEVATION
		STORM SEWER PIPE
		STORM SEWER INLET
		STORM SEWER BALES
		TELEPHONE PED/MANHOLE
UGT	UGT	TELEPHONE (UNDERGROUND)
	OHT	TELEPHONE (OVERHEAD)
		TREE LINE CANOPY
		TREE/TREE TO BE REMOVED
		UTILITY EASEMENT
0"W	8"W	WATER MAIN PIPE
		WATER VALVE
	W	WATER METER
		WATER THRUST BLOCK
		WATER MAIN REDUCER
		WATER MAIN BLOWOFF VALVE

GENERAL NOTES:

1. THE OWNER/DEVELOPER SHALL BE RESPONSIBLE FOR THE COST OF ANY REQUIRED ADJUSTMENTS OR DAMAGE TO THE EXISTING UTILITIES DUE TO SITE GRADING, PAVING, OR LOT LINE ADJUSTMENTS.
2. SPRINGDALE WATER UTILITIES WILL INSTALL THE PROPOSED WATER METER SERVICE AT THE OWNER/DEVELOPER'S EXPENSE.
3. REQUESTS FOR METER SERVICES LARGER THAN A 5/8" WATER METER SETTER FOR IRRIGATION OR LARGER THAN 1" METER SETTER FOR POTABLE WATER WILL HAVE TO BE APPROVED IN WRITING BY THE ENGINEERING DIRECTOR OF SPRINGDALE WATER UTILITIES.
4. INSTALL DOMESTIC METER AND IRRIGATION METER WITH A BACKFLOW PREVENTER.
5. EXTERIOR GROUND-MOUNTED OR BUILDING-MOUNTED EQUIPMENT INCLUDING, BUT NOT LIMITED TO, MECHANICAL EQUIPMENT, UTILITIES, AND BANKS OF METERS SHALL BE SCREENED FROM PUBLIC VIEW WITH LANDSCAPING OR WITH AN ARCHITECTURAL TREATMENT COMPATIBLE WITH THE BUILDING ARCHITECTURE.
6. ALL UTILITY WIRES, LINES, AND/OR CABLE UTILIZED BY ELECTRIC AND/OR TELECOMMUNICATIONS COMPANIES SHALL BE PLACED UNDERGROUND. EXCLUDING 12Kv AND ABOVE.
7. HANDICAPPED RAMPS SHALL BE PROVIDED WHEREVER A SIDEWALK CROSSES A CURB AT CROSSWALKS, DRIVEWAYS, AND STREET INTERSECTIONS.
8. ALL MATERIAL AND COMPONENTS INSTALLED AFTER JANUARY 3, 2014 IN DRINKING WATER SYSTEMS ARE REQUIRED TO COMPLY WITH THE FEDERAL DEFINITION OF 'LEAD FREE' CONTAINED IN PUBLIC LAW 111-380.
9. ANY RELOCATION OF EXISTING FACILITIES OR EXTENSION OF LINE THAT HAS TO BE BUILT SPECIFICALLY TO FEED THIS PROJECT WILL BE AT FULL COST TO THE DEVELOPER.
10. IF OFF SITE EASEMENTS ARE NEEDED FOR SWEPCO TO PROVIDE ELECTRICITY TO THE DEVELOPMENT, EASEMENTS MUST BE OBTAINED BY DEVELOPER AND PROVIDED TO SWEPCO BEFORE THE DESIGN WILL BEGIN. ON SITE EASEMENTS MUST BE SHOWN ON PLAT AND RECORDED WITH THE COUNTY.
11. ALL PROPERTY CORNERS AND EASEMENTS MUST BE CLEARLY MARKED BEFORE CONSTRUCTION WILL BEGIN.
12. ALL CONDUITS PLACED AT ROAD CROSSINGS BY DEVELOPER MUST HAVE 48 INCH OF COVER AT FINAL GRADE AND MARKED WITH POST TO IDENTIFY END OF CONDUITS. (3 – 4 INCH SCHEDULE CONDUITS TO BE USED FOR ELECTRIC ONLY AT ALL ROAD CROSSINGS, CONDUITS MUST EXTEND PAST THE EDGE OF ANY OBSTRUCTIONS SO THAT THEY ARE ACCESSIBLE DURING CONSTRUCTION.) THERE MUST BE MINIMUM SEPARATION OF 12 INCHES BETWEEN CONDUITS FOR ELECTRIC AND CONDUITS FOR OTHER UTILITIES. THIS IS NESC CODE 354. ALL CONDUITS FOR ROAD CROSSINGS AND SPECIFIC WIDTHS OF U.E. MUST BE SHOWN ON FINAL PLAT BEFORE SWEPCO ELECTRIC WILL SIGN THE FINAL PLAT.
13. TRANSFORMER MUST HAVE A MINIMUM OF 30 FEET CLEARANCE FROM ANY STRUCTURE. ANY VARIATION OF THIS REQUIREMENT MUST HAVE WRITTEN APPROVAL FROM AN SWEPCO REPRESENTATIVE.
14. TRANSFORMER WILL NEED TO BE LOCATED IN AN AREA EASILY ACCESSIBLE TO SWEPCO LINE TRUCKS FOR INSTALLATION AND CONTINUED MAINTENANCE.
15. BOLLARDS WILL NEED TO BE INSTALLED AT ALL FOUR CORNERS OF TRANSFORMER PAD
16. A MINIMUM 15' UTILITY EASEMENT WILL BE REQUIRED FOR ALL UNDERGROUND CONDUCTORS UP TO AND INCLUDING THE LOCATION OF THE PAD MOUNT TRANSFORMER.
16. DEVELOPER WILL NEED TO CONTACT NANCY GUISINGER AT SWEPCO (479-225-0813) AND PROVIDE HER WITH ELECTRICAL LOAD INFORMATION BEFORE ANY COST TO DEVELOPER CAN BE DETERMINED.
17. DEVELOPER TO PROVIDE ALL TRENCH AND PVC CONDUITS INCLUDING PVC SWEEPS IN ACCORDANCE WITH SWEPCO SPECIFICATIONS. NO METAL CONDUIT OR METAL SWEEPS ARE TO BE USED.
18. ALL UTILITY EASEMENTS TO BE CLEARED OF ALL TREES, BRUSH, DIRT PILES, BUILDINGS AND DEBRIS SO THAT THE EASEMENT IS ACCESSIBLE WITH EQUIPMENT. IF EASEMENT IS NOT CLEARED DEVELOPER MAY BE SUBJECT TO EXTRA CHARGES.
19. DEVELOPER OR CONTRACTOR MUST APPLY FOR ELECTRIC TEMPORARY CONSTRUCTION AND PERMANENT SERVICE BEFORE ANY DESIGN AND COST IS DETERMINED BY SWEPCO.
20. ANY ADDITIONAL WATER METER SERVICES OR SANITARY SEWER SERVICES NEEDED IN THE FUTURE SHALL BE INSTALLED BY SPRINGDALE WATER UTILITIES AT THE OWNER/DEVELOPER'S EXPENSE.
21. ALL ROOFTOP EQUIPMENT SHALL BE SCREENED FROM PUBLIC VIEW WITH AN ARCHITECTURAL TREATMENT THAT IS COMPATIBLE WITH THE BUILDING ARCHITECTURE. WHEN A COMMERCIAL DEVELOPMENT INCLUDES A FENCE OR WALL, THE FOLLOWING GUIDELINES AND STANDARDS APPLY:
    A. MAXIMUM HEIGHT OF A FENCE OR WALL SHALL BE 8'
    B. CONSTRUCTED OF HIGH QUALITY MATERIALS SUCH AS, DECORATIVE BLOCKS, BRICK, STONE, CYPRESS, CEDAR, REDWOOD, AND/OR WROUGHT IRON.
    C. MAXIMUM LENGTH OF A CONTINUOUS, UNBROKEN, AND UNINTERRUPTED FENCE OR WALL SHALL BE 50'. BREAKS SHALL BE PROVIDED THROUGH THE USE OF COLUMNS, LANDSCAPING POCKETS, TRANSPARENT SECTIONS, AND/OR A CHANGE TO DIFFERENT MATERIALS.
22. The streetlight fixture shall be by LSI Lighting Model Crossover XRM, SPL-XRM3-119W/LED/UE-MSV-IPC-PC-COS

ADA NOTES:
1. HANDICAP SPACES MUST HAVE A MAXIMUM OF 2% SLOPE IN ALL DIRECTIONS.
2. CONTACT THE CITY OF SPRINGDALE AND REQUEST AN INSPECTION PRIOR TO POURING ANY SIDEWALK OR DRIVEWAY IN THE RIGHT-OF-WAY

FIRE DEPARTMENT NOTES:
1. "NO PARKING FIRE LANE" SIGNS SHALL BE PROVIDED FOR FIRE APPARATUS ACCESS ROADS. SIGNS SHALL BE LOCATED AT EACH END OF A PAINTED CURB, WITH A MAXIMUM SPACING OF 100 LINEAR FEET.
2. UNOBSTRUCTED ACCESS TO FIRE HYDRANTS SHALL BE MAINTAINED AT ALL TIMES.

BENCHMARK INFORMATION:

#1)MAG NAIL IN CURB
N: 678228.02
E: 662231.30
ELEV: 1293.85

#2)CONCRETE MONUMENT
N: 678539.98
E: 662128.26
ELEV: 1294.34

DRAWN BY: J. Young
ENGINEER: G. Bates

STATE OF ARKANSAS — REGISTERED PROFESSIONAL ENGINEER — No. 9810 — GEOFFREY H. BATES

CERTIFICATE OF AUTHORIZATION — BATES & ASSOCIATES, INC. #335 — ARKANSAS ENGINEER

Copyright 2015, Bates and Associates, Inc.

REVISIONS	DATE
FIRST SUBMITTAL	08/26/15
REVISIONS PER 9/10/15 TECHNICAL PLAT REVIEW	19/17/15

LAKESIDE AT HAR-BER
LARGE SCALE DEVELOPMENT PLANS
L15-18
SITE & UTILITY PLAN
SPRINGDALE, ARKANSAS

Bates & Associates, Inc.
www.nwabatesinc.com Civil Engineering & Surveying
91 W. Colt Square Dr. Suite 3
Fayetteville, Arkansas 72703
Phone · 479.442.9350 Fax 479.521.9350

PROJECT NO
15-201

DRAWING NO
02

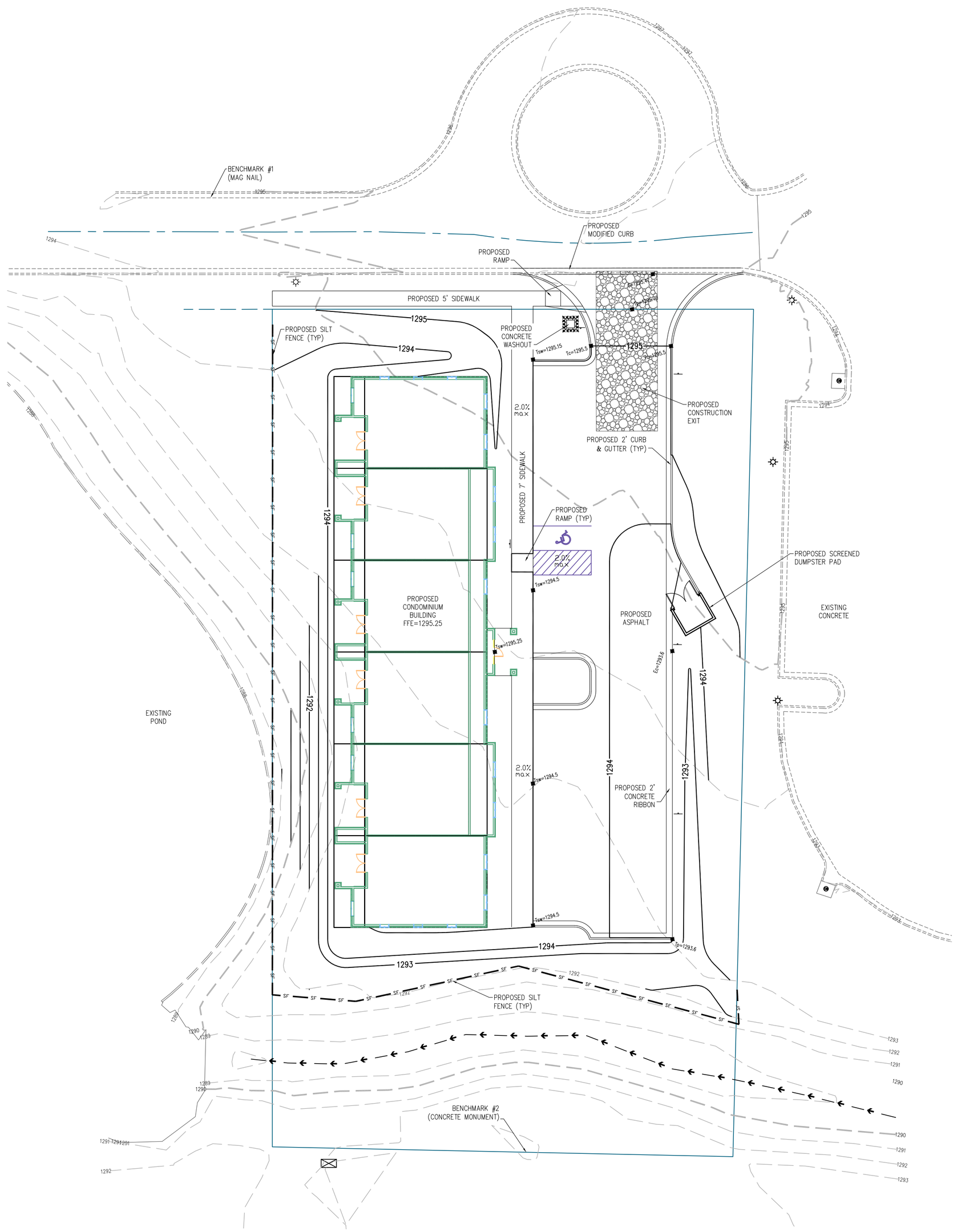

NORTH

0 20 40
GRAPHIC SCALE IN FEET

SIDEWALK AND HANDICAP SPACE NOTES:

1. SIDEWALK CROSS SLOPE TO BE 2% OR LESS

3. HANDICAP SPACES MUST HAVE A MAXIMUM OF 2% SLOPE IN ALL DIRECTIONS.

CONSTRUCTION NOTES:

1. ALL AREAS UNDER BUILDINGS AND PAVED AREAS SHALL BE STRIPPED OF TOPSOIL. THE RESULTING SUB GRADE SHALL BE THOROUGHLY COMPACTED. ANY SOFT OR YIELDING AREAS SHALL BE STABILIZED OR REMOVED AND REPLACED WITH SUITABLE MATERIAL.

2. FILL MATERIAL SHALL BE APPROVED BY THE ENGINEER. ALL FILL SHALL BE MADE IN LIFTS NOT EXCEEDING 8" THICKNESS WITH EACH LIFT COMPACTED TO 95% STANDARD PROCTOR DENSITY. FILL SLOPES SHALL NOT BE STEEPER THAN 3:1 SLOPE.

3. ALL GRADED AREAS SHALL HAVE 4" OF TOPSOIL, SOD, EROSION FABRIC, HERBACEOUS GROUND COVER, AND/OR HYDROSEEDED WITH A WARM SEASON GRASS. REVEGETATION SHALL BE IMMEDIATELY AFTER THE PHYSICAL ALTERATION OF THE LAND IS COMPLETE (MAXIMUM OF 15 DAYS).

4. ALL WORK SHALL BE IN ACCORDANCE WITH THE CITY GRADING REGULATIONS. SILT FENCES, BERMS, DETENTION PONDS, OR OTHER MEANS NEEDED TO MEET THE CITY GRADING REQUIREMENTS SHALL BE PROVIDED AS REQUIRED TO MEET THESE REGULATIONS.

5. ALL HEAVILY TRAVELED DIRT AREAS SHALL BE WETTED TO PREVENT EXCESSIVE DUST, DURING CONSTRUCTION.

6. ALL MUD/DIRT LEFT ON PUBLIC STREETS OR ADJACENT PROPERTIES AS A RESULT OF THIS CONSTRUCTION SHALL BE IMMEDIATELY SHOVELED OR SWEPT AWAY UNTIL IT IS COMPLETELY REMOVED BY THE CONTRACTOR AND PLACED BACK ON THE SITE.

7. ALL MATERIALS AND CONSTRUCTION SHALL COMPLY WITH THE CITY OF SPRINGDALE'S REQUIREMENTS. IN THE CASE OF CONFLICTS, THE CITY'S CRITERIA SHALL GOVERN.

8. CUT OR FILL SLOPES SHALL HAVE A FINISH GRADE NO STEEPER THAN 3:1.

9. ANY RETAINING WALL MORE THAN FOUR FEET IN HEIGHT SHALL BE DESIGNED BY A REGISTERED PROFESSIONAL ENGINEER AND SHALL BE FIELD INSPECTED BY THE DESIGN ENGINEER.

10 SAFETY RAILINGS ARE REQUIRED ON ANY RETAINING WALL GREATER THAN 30" IN HEIGHT. THE SAFETY RAILING SHALL BE BUILT IN TO THE MORE STRINGENT REQUIREMENTS OF THE SBCC OR AASHTO.

11. AREAS WILL BE STABILIZED WITH A TEMPORARY SEED AND MULCH WITHIN 14 DAYS OF THE LAST DISTURBANCE IF CONSTRUCTION ACTIVITY IS TO TEMPORARILY CEASE FOR MORE THAN 21 DAYS.

12. ONCE CONSTRUCTION ACTIVITY CEASES PERMANENTLY IN AN AREA, THAT AREA WILL BE STABILIZED WITH PERMANENT SEED AND MULCH.

SEDIMENT & EROSION CONTROL NOTES:

1. CONTRACTOR SHALL OBTAIN ALL PERMITS REQUIRED FROM A.D.E.Q. AND CITY REGARDING RUNOFF, EROSION CONTROL, AND GRADING BEFORE BEGINNING CONSTRUCTION.

2. CONTRACTOR SHALL POST STORM WATER POLLUTION PREVENTION PLAN.

3. ALL EROSION & SEDIMENT CONTROL DEVICES SHALL BE MAINTAINED AND OCCASIONALLY REPLACED THROUGHOUT THE CONSTRUCTION PROCESS.

4. ALL EROSION & SEDIMENT CONTROL DEVICES SHOWN SHALL BE INSTALLED BEFORE CONSTRUCTION BEGINS. THOSE ITEMS SHALL REMAIN IN PLACE UNTIL ALL EXCAVATION IS COMPLETE.

5. THE PROPERTY OWNER OR MAIN CONTRACTOR ONSITE WILL BE RESPONSIBLE FOR RESTORING ALL EROSION AND SEDIMENT CONTROL SYSTEMS AND PUBLIC INFRASTRUCTURE DAMAGE OR DISTURBED BY UNDERGROUND PRIVATE FRANCHISED UTILITY CONSTRICTION SUCH AS WATER AND SEWER SERVICE LEADS, TELEPHONE, GAS, CABLE, ETC. EROSION AND SEDIMENT CONTROL SYSTEMS MUST BE IMMEDIATELY RESTORED AFTER EACH UTILITY CONSTRUCTION

REVEGETATION NOTES:

REVEGETATION OF DISTURBED AREAS SHALL BE IN ACCORDANCE THE FOLLOWING:

- PERMANENT IMPROVEMENTS. PERMANENT IMPROVEMENTS SUCH AS STREETS, STORM SEWERS, CURB AND GUTTERS, AND OTHER FEATURES FOR CONTROL OF RUNOFF SHALL BE SCHEDULED COINCIDENTAL TO REMOVING VEGETATIVE COVER FROM THE AREA SO THAT LARGE AREAS ARE NOT LEFT EXPOSED BEYOND THE CAPACITY OF TEMPORARY CONTROL MEASURES.

- TOP SOIL. TOP SOIL SHALL BE STOCKPILED AND PROTECTED FOR LATER USE ON AREAS REQUIRING LANDSCAPING. IF TOP SOIL OR OTHER SOIL IS TO BE STOCKPILED FOR MORE THAN 30 DAYS, A TEMPORARY COVER OF ANNUAL RYE OR OTHER SUITABLE GRASS SHALL BE PLANTED.

- EXISTING VEGETATION. EVERY MEANS SHALL BE TAKEN TO CONSERVE AND PROTECT EXISTING VEGETATION.

- SEDIMENT CONTROLS SHALL REMAIN IN PLACE UNTIL RE-VEGETATION IS ESTABLISHED UNLESS OTHERWISE ALLOWED BY THE CITY.

- 4:1 TO 3:1 GRADE: THE SLOPE SHALL BE COVERED WITH LANDSCAPE FABRIC AND HYDRO-SEEDED WITH MULCH AND FERTILIZER, OR STAKED SOD, OR GROUNDCOVER. SAID PLANTING SHALL PROVIDE COMPLETE AND UNIFORM COVERAGE IN NO MORE THAN TWO GROWING SEASONS.

BENCHMARK INFORMATION:

#1)MAG NAIL IN CURB
N: 678228.02
E: 662231.30
ELEV: 1293.85

#2)CONCRETE MONUMENT
N: 678539.98
E: 662128.26
ELEV: 1294.34

CALL BEFORE YOU DIG!
ARKANSAS ONE CALL
1-800-482-8998

LEGEND

PROPOSED	EXISTING	DESCRIPTION
		ASPHALT (EDGE)
		ASPHALT (SURFACE)
		BUILDING
		BUILDING SETBACK LINE
		BOLLARD
UGTV	UGTV	CABLE TV (UNDERGROUND)
	OHTV	CABLE TV (OVERHEAD)
		CENTERLINE
		CONCRETE SURFACE
		CONDUIT
1255	1255	CONTOURS
		CURB & GUTTER
UGE	UGE	ELECTRICAL (UNDERGROUND)
OHE	OHE	ELECTRICAL (OVERHEAD)
		ELECT. TRANSFORMER
		EASEMENT
		FENCE (WIRE/WOOD/CHAIN)
	FO	FIBER OPTIC CABLE
		FIRE HYDRANT ASSEMBLY
		FLOWLINE
	FM	FORCE MAIN
GAS	GAS	GAS MAIN
		GAS METER
		GRAVEL SURFACE (EDGE)
		GRAVEL SURFACE
		IRON PIN (5/8" RE-BAR)
		LIGHT
		MONUMENT (CONCRETE)
		POND
		POWER POLE
		PROPERTY LINE (EXTERNAL)
		RETAINING WALL
		RIGHT-OF-WAY
8"SS	8"SS	SANITARY SEWER PIPE
		SANITARY SEWER MANHOLE
		SANITARY SEWER SERVICE
		SECTION LINE
		SIDEWALK
		SIGN
		SILT FENCE
		SPOT ELEVATION
		STORM SEWER PIPE
		STORM SEWER INLET
		STORM SEWER BALES
		TELEPHONE PED/MANHOLE
UGT	UGT	TELEPHONE (UNDERGROUND)
	OHT	TELEPHONE (OVERHEAD)
		TREE LINE CANOPY
		TREE/TREE TO BE REMOVED
		UTILITY EASEMENT
8"W	8"W	WATER MAIN PIPE
		WATER VALVE
		WATER METER
		WATER THRUST BLOCK
		WATER MAIN REDUCER
		WATER MAIN BLOWOFF VALVE

STATE OF ARKANSAS
REGISTERED PROFESSIONAL ENGINEER
No. 9810
GEOFFREY H. BATES

CERTIFICATE OF AUTHORIZATION
BATES & ASSOCIATES, INC.
#335
ARKANSAS ENGINEER

DRAWN BY: J. Young ENGINEER: G. Bates

Copyright 2015, Bates and Associates, Inc.

REVISIONS	DATE
FIRST SUBMITTAL	08/26/15
REVISIONS PER 9/10/15 TECHNICAL PLAT REVIEW	19/17/15

LAKESIDE AT HAR-BER
LARGE SCALE DEVELOPMENT PLANS
L15-18
GRADING & DRAINAGE PLAN
SPRINGDALE, ARKANSAS

Bates & Associates, Inc.
Civil Engineering & Surveying
www.nwabatesinc.com
91 W. Colt Square Dr. Suite 3
Fayetteville, Arkansas 72703
Phone - 479.442.9350 Fax 479.521.9350

PROJECT NO
15-201

DRAWING NO
03

Time: 12:32 pm
Scale: 1=50 (PS)
Date: 8/26/2015

Drawing Name: 15\200\15-201\engineering\03 Grading Plan.dwg
Xrefs Used: 24X36, base, COA BBA, BATES-AR

INTERIOR PARKING LOT LANDSCAPING DIAGRAM

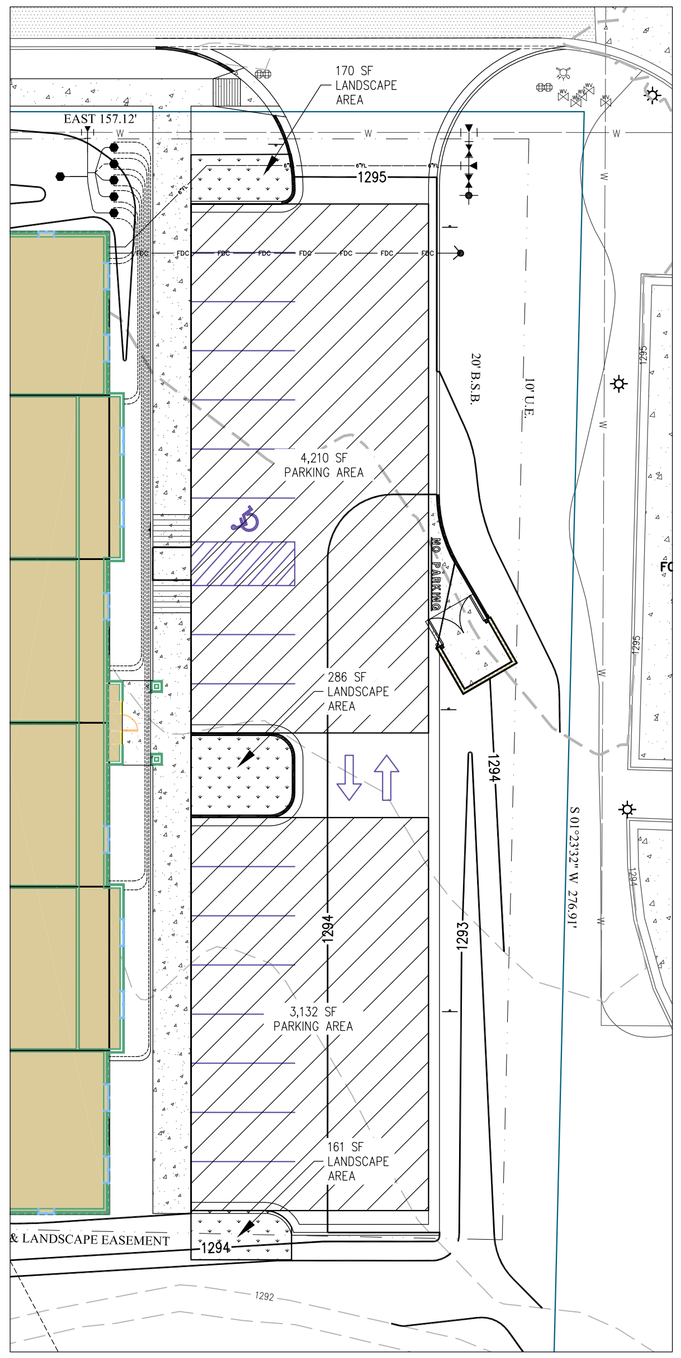

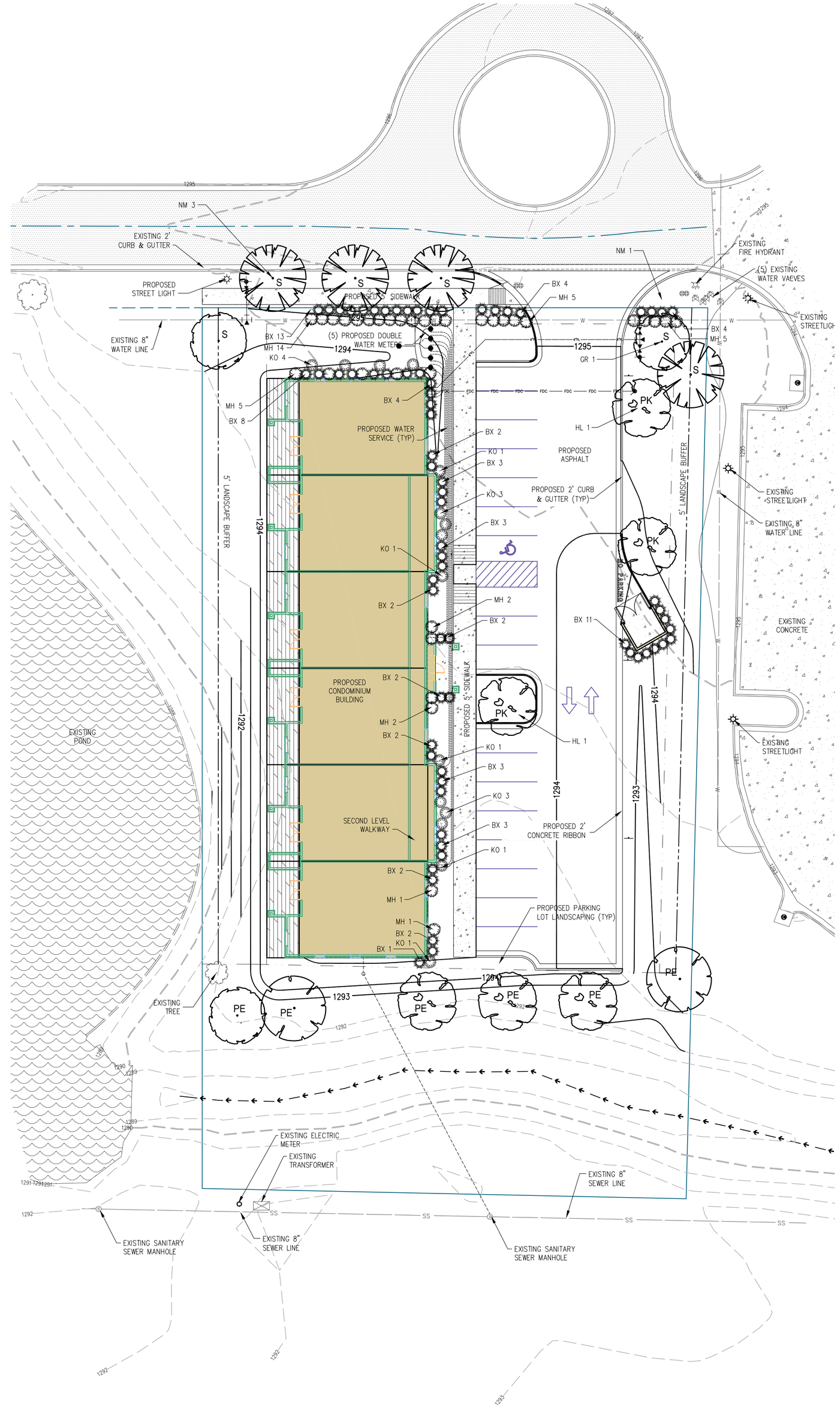

CALL BEFORE YOU DIG! 1-800-482-8998 ARKANSAS ONE CALL

NORTH

0 20 40

GRAPHIC SCALE IN FEET

LANDSCAPING

1. PREPARE TOPSOIL FOR SHRUB AND GROUND COVER BEDS BY TILLING A 2 INCH LAYER (165 CF PER 1000 SQ. FT.) OF COMPOST INTO THE UPPER 6 INCHES OF SOIL.
2. ALL PLANTING BEDS THAT ABUT LAWN AREAS TO BE BORDERED BY STEEL EDGING.
3. SOLID SLAB SOD BERMUDA GRASS OR BERMUDA SEED TO BE PLANTED IN ALL TURF AREAS.
4. TOPSOIL DEPTH SHALL BE MINIMUM 18" IN ALL SHRUB AND GROUNDCOVER BEDS.
5. APPLY 3" OF ORGANIC MULCH TO ALL SHRUB AND GROUNDCOVER BEDS.
6. APPLY 1/2 POUND OSMOCOTE 8-6-12 EVENLY OVER CULTIVATED AREA AROUND EACH TREE AND 1 POUND PER 100 SQUARE FEET TO SHRUB AND GROUND COVER PLANTINGS.
7. IRRIGATION SHALL BE EITHER UNDERGROUND AUTOMATIC SYSTEM OR SHALL UTILIZE HOSE BIBS EVERY 100'.
8. TREAT ALL LANDSCAPE AREAS TO CONTROL WEED GROWTH PRIOR TO STARTING CONSTRUCTION.
9. ALL LANDSCAPE BEDS SHALL BE FREE OF SOD AND MULCH SHALL COVER THE BARE SOIL TO EASE MAINTENANCE.
10. DIG DOWN THE EDGE OF ALL BEDS WHERE THEY ARE ADJACENT TO WALLS, WALKWAYS OR CURBS, SO THAT THE WALL, WALKWAY, OR CURB WILL WORK AS A BED EDGE TO CONTAIN THE MULCH OR GRAVEL.
11. PLANTING BEDS SHALL HAVE AMENDED SOIL TO INSURE THE HEALTH OF THE PLANT MATERIALS.

TREES

01. EXCAVATION FOR TREE PITS SHALL BE 8' IN DIAMETER. CIRCLE TO BE CENTERED ON TREE AND TRUE IN FORM.
02. STAKE ALL TREES BY USING THREE METAL FENCE POST STAKES AND THREE TIES. DRIVE STAKES APPROXIMATELY 6"OUTSIDE OF TREE ROOTBALL AND AN EQUAL DISTANCE FROM TREE TRUNK.
03. ALL PRESERVED MATURE TREES ON THE SITE SHALL HAVE A MULCH RING ADDED AROUND THE TRUNK.
04. ALL PLANTING HOLES FOR TREES AND SHRUBS SHALL BE BACKFILLED WITH AMENDED SOIL, FREE OF SOD.
05. ALL LANDSCAPE TREES PLANTED TO MEET STREET TREE, MITIGATION TREE OR OTHER LANDSCAPE CODE REQUIREMENTS MUST BE SINGLE STEM, MINIMUM 2" CALIPER TREES. NO DOUBLE OF TRI-STEM TREES WILL BE COUNTED TOWARDS MEETING REQUIREMENTS.
06. IF PLANTING MATERIAL IS TO BE B&B THEN THE B&B MUST BE NATURAL FIBERS AND NOT SYNTHETIC.

PLANT WARRANTY

WARRANT ALL PLANT MATERIAL TO BE IN HEALTHY, VIGOROUS CONDITION FOR A PERIOD OF 2 YEARS AFTER SUBSTANTIAL COMPLETION AND ACCEPTANCE OF THE PROJECT.

LANDSCAPE IRRIGATION

1. ALL LANDSCAPE AREAS WILL BE IRRIGATED BY AUTOMATIC IRRIGATION OR HOSE BIBS.

LANDSCAPE REQUIREMENTS:

FRONTAGE LANDSCAPING: OPTION 1 (SEC. 56-31) LABELED WITH "S"
1 SHADE TREE & 7 SHRUBS PER 25 LINEAR FEET OF STREET FRONTAGE
LINEAR STREET FRONTAGE: 157 FT.

REQUIRED: TREES / SHRUBS: 6 TREES / 42 SHRUBS
PROVIDED: TREES / SHRUBS: 6 TREES / 45 SHRUBS

PERIMETER LANDSCAPING: LABELED WITH "PE"
1 SHADE TREE PER 25 LINEAR FEET
696 LINEAR FEET/ 25 = 28 TREES
6 PROPOSED ALONG THE SOUTH LINE (VARIANCE REQUESTED)

INTERIOR LANDSCAPING: TREES LABELED WITH "PZ"
8% OF PARKING LOT AREA FOR INTERIOR PLANTING: 587 SF
PROPOSED PARKING LOT AREA: 7342 S.F.

INTERIOR LANDSCAPE AREA REQUIRED: 587 SF
INTERIOR LANDSCAPE AREA PROVIDED: 617 SF

PLANT LIST

QTY	SYM	COMMON NAME/ BOTANICAL NAME	ROOT	MIN. SIZE	NOTES
3	GR	GOLDEN RAIN TREE Koelreuteria paniculata	B&B	2" CAL	
4	NW	NORWAY MAPLE Acer platanoides	B&B	2" CAL	
6	HL	SHADEMASTER THORNLESS HONEYLOCUST Gleditsia triacanthos 'Shademaster'	B&B	2" CAL	
70	BX	BOXWOOD Buxus x sempervirens	CONT.	3 GAL	
34	MH	'ADAGIO' DWARF MAIDENHAIR Miscanthus sinensis 'Adagio'	CONT.	3 GAL	
15	KO	KNOCKOUT ROSE Rosa species	CONT.	3 GAL	

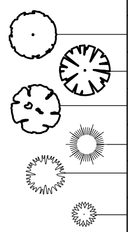

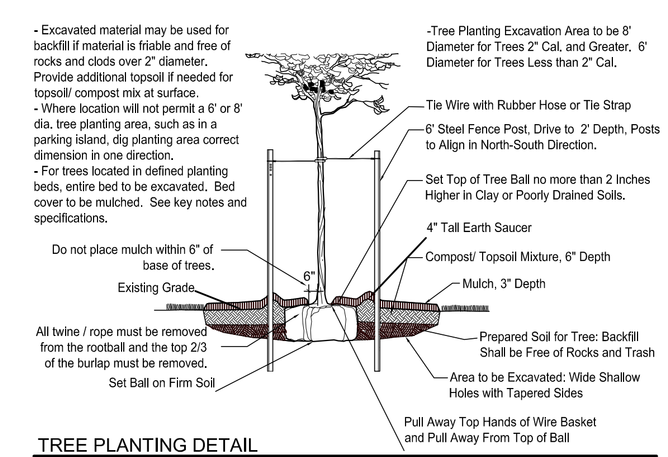

TREE PLANTING DETAIL

N.T.S.

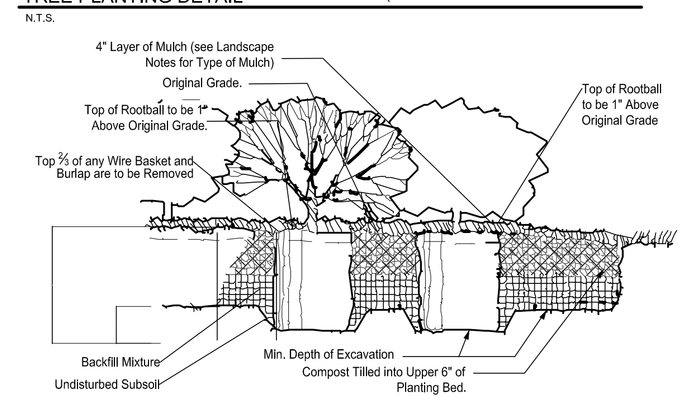

SHRUB PLANTING DETAIL

N.T.S.

STATE OF ARKANSAS REGISTERED PROFESSIONAL ENGINEER No. 9810 GEOFFREY H. BATES

CERTIFICATE OF AUTHORIZATION BATES & ASSOCIATES, INC. #335 ARKANSAS ENGINEER

ENGINEER: G. Bates

DRAWN BY: J. Young

Copyright 2015, Bates and Associates, Inc.

REVISIONS	DATE
FIRST SUBMITTAL	08/26/15
REVISIONS PER 9/10/15 TECHNICAL PLAT REVIEW	19/17/15

LAKESIDE AT HAR-BER
LARGE SCALE DEVELOPMENT PLANS
L15-18
LANDSCAPE PLAN
SPRINGDALE, ARKANSAS

Bates & Associates, Inc.
www.nwabatesinc.com
Civil Engineering & Surveying
91 W. Colt Square Dr. Suite 3
Fayetteville, Arkansas 72703
Phone - 479.442.9350 Fax 479.521.9350

PROJECT NO
15-201

DRAWING NO
04

Time: 12:36 pm
Scale: 1"=40' (PS)
Date: 8/26/2015

Drawing Name: 15\200\15-201\engineering\04 Landscape Plan.dwg
Xrefs Used: C01 BBA, BATES-AR, 24X36, base

Time: 12:36 pm
Scale: 1=40 (PS)
Date: 8/26/2015

Drawing Name: 15\200\15-201\engineering\04 Landscape Plan.dwg
Xrefs Used: COA BBA, BATES-AR, 24X36, base

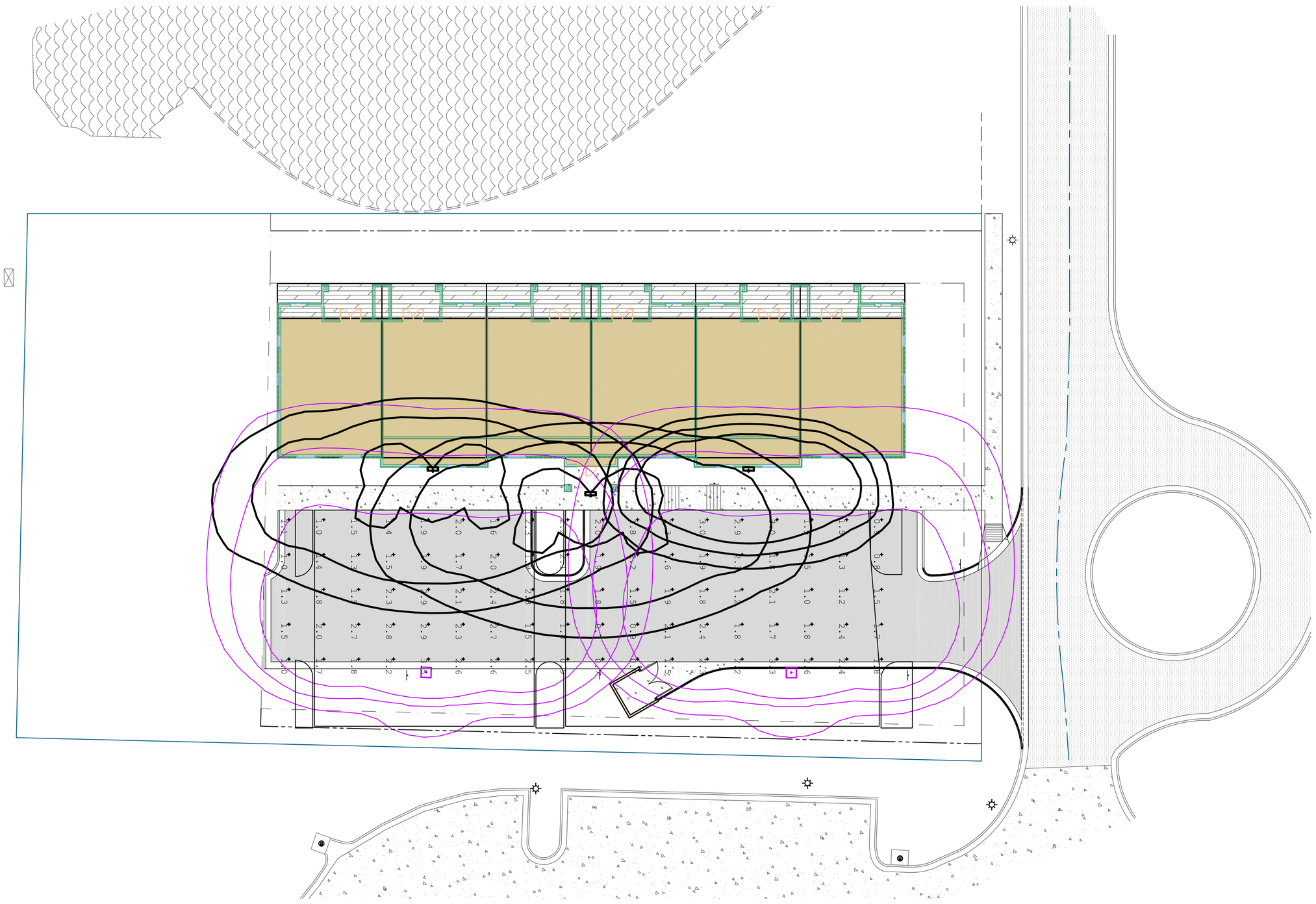

Luminaire Schedule

Symbol	Qty	Label	Arrangement	Total Lamp Lumens	LLF	Description
	3	IST-E02-LED-E1-BL2	SINGLE	N.A.	0.920	IST-E02-LED-E1-BL2
	2	GLEON-AE-03-LED-E1-SL4	SINGLE	N.A.	0.920	GLEON-AE-03-LED-E1-SL4

Calculation Summary

Label	CalcType	Units	Avg	Max	Min	Avg/Min	Max/Min
Lot Top	Illuminance	Fc	1.88	3.5	0.7	2.69	5.00

NORTH

GRAPHIC SCALE IN FEET 0 20 40

ARKANSAS ONE CALL 1-800-482-8998 CALL BEFORE YOU DIG!

DRAWING NO 05

PROJECT NO 15-201

Bates & Associates, Inc.
www.nwabatesinc.com
Civil Engineering & Surveying
91 W. Colt Square Dr. Suite 3
Fayetteville, Arkansas 72703
Phone · 479.442.9350 Fax 479.521.9350

LAKESIDE AT HAR-BER
LARGE SCALE DEVELOPMENT PLANS
L15-18
LIGHTING PLAN
SPRINGDALE, ARKANSAS

REVISIONS	DATE
FIRST SUBMITTAL	08/26/15
REVISIONS PER 9/10/15 TECHNICAL PLAT REVIEW	19/17/15

DRAWN BY: J. Young ENGINEER: G. Bates

CERTIFICATE OF AUTHORIZATION BATES & ASSOCIATES, INC. #1335 ARKANSAS ENGINEER

STATE OF ARKANSAS REGISTERED PROFESSIONAL ENGINEER No. 9810 GEOFFREY H. BATES

Copyright 2015, Bates and Associates, Inc.

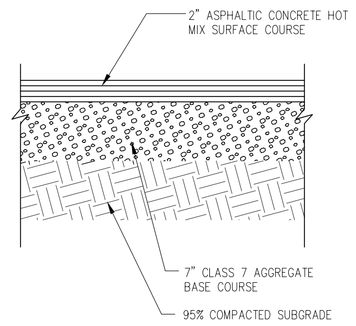

ASPHALT PAVEMENT SECTION
N.T.S.

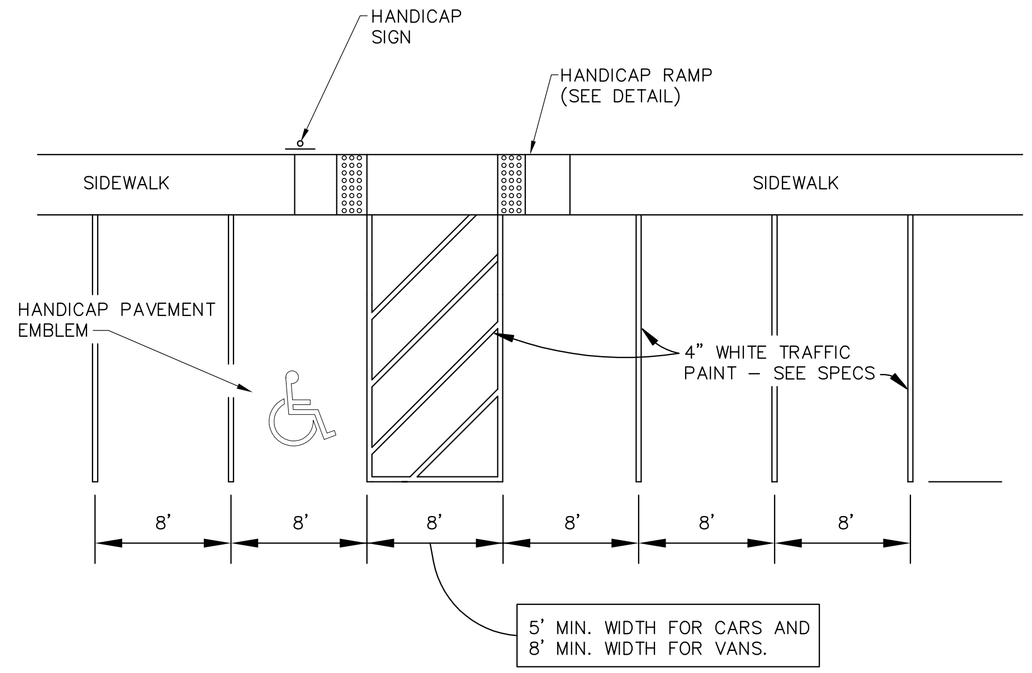

TYP. PARKING STRIPING LAYOUT
N.T.S.

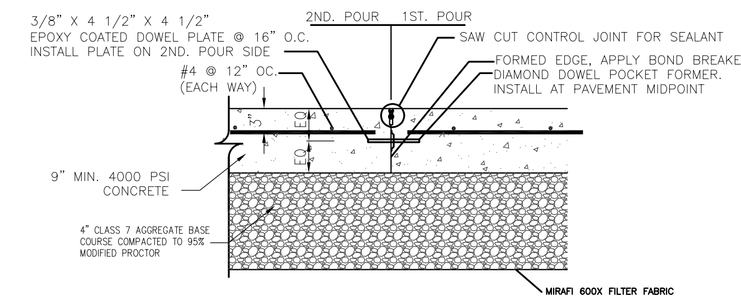

NOTE: DOWEL SYSTEM SHALL BE DIAMOND DOWEL SYSTEM BY PNA CONSTRUCTION TECHNOLOGIES OR EQUAL

JOINT CONTROL DETAIL
CONCRETE PAVEMENT SECTION
N.T.S.

SILT FENCE NOTES:

1. POSTS WHICH SUPPORT THE SILT FENCE SHALL BE INSTALLED ON A SLIGHT ANGLE TOWARD THE ANTICIPATED RUNOFF.
   SOURCE. POST MUST BE EMBEDDED A MINIMUM OF ONE FOOT.
2. THE TOE OF THE SILT FENCE SHALL BE TRENCHED IN WITH A SPADE OR MECHANICAL TRENCHER, SO THAT THE DOWNSLOPE
   FACE OF THE TRENCH IS FLAT AND PERPENDICULAR TO THE LINE OF FLOW. HERE FENCE CANNOT BE TRENCHED IN (e.g.
   PAVEMENT), WEIGHT FABRIC FLAP WITH ROCK ON UPHILL SIDE TO PREVENT FLOW FROM SEEPING UNDER FENCE.
3. THE TRENCH MUST BE A MINIMUM OF 6 INCHES DEEP AND 6 INCHES WIDE TO ALLOW FOR THE SILT FENCE FABRIC TO BE
   LAID IN THE GROUND AND BACKFILLED WITH COMPACTED MATERIAL.
4. SILT FENCE SHOULD BE SECURELY FASTENED TO EACH SUPPORT POST OR TO WOVEN WIRE, WHICH IN TURN IS ATTACHED
   TO THE FENCE POST. THERE SHALL BE A 3 FOOT OVERLAP, SECURELY FASTENED WHERE ENDS OF FABRIC MEET.
5. REPAIR OR REPLACEMENT SHALL BE MADE PROMPTLY AS NEEDED.
6. SILT FENCE SHALL BE REMOVED WHEN THE SITE IS COMPLETELY STABILIZED SO AS NOT TO BLOCK OR IMPEDE STORM
   FLOW OR DRAINAGE.
7. ACCUMULATED SILT SHALL BE REMOVED WHEN IT REACHES A DEPTH OF HALF THE HEIGHT OF THE FENCE. THE SILT SHALL
   BE DISPOSED OF AT AN APPROVED SITE AND IN SUCH A MANNER AS TO NOT CONTRIBUTE TO ADDITIONAL SILTATION.

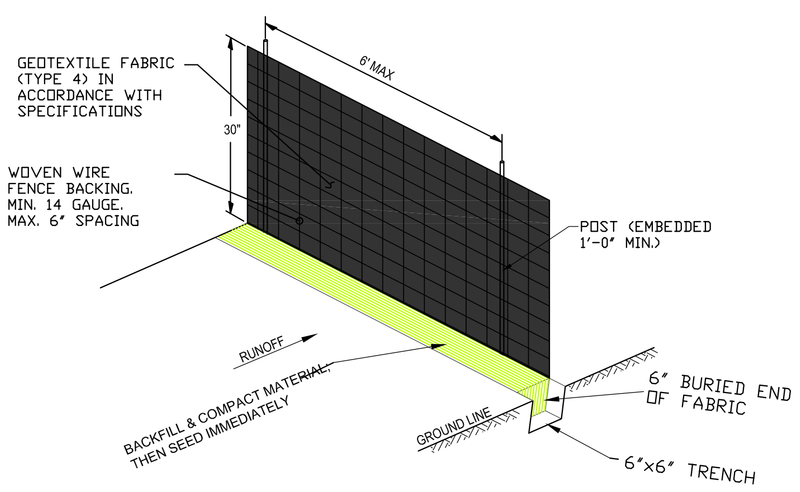

SILT FENCE
N.T.S.

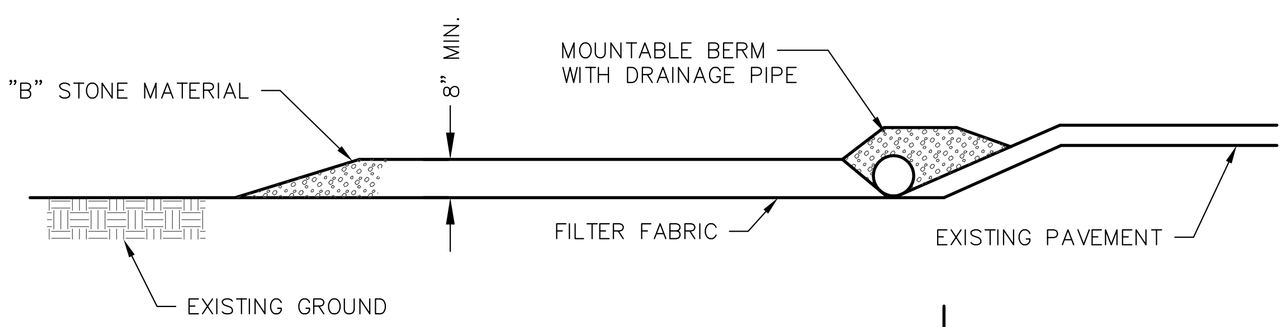

PROFILE

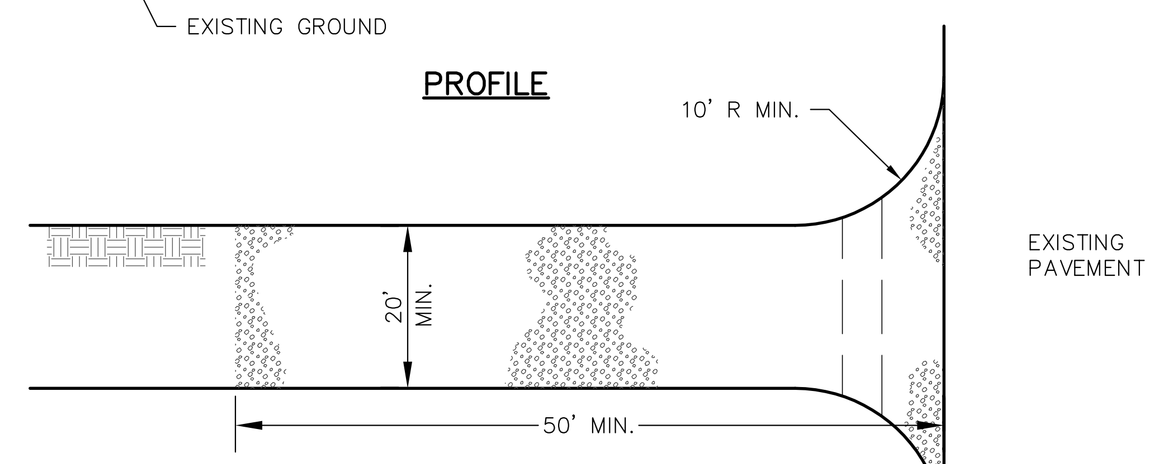

PLAN
STABILIZED CONSTRUCTION ENTRANCE
N.T.S.

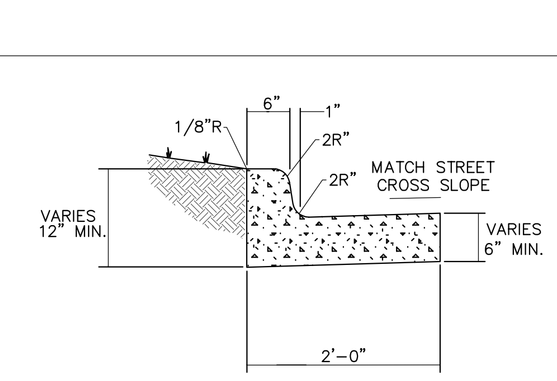

STANDARD
N.T.S.

TO BE USED AT STREET INTERSECTIONS WITH LESS THAN 1% GRADE

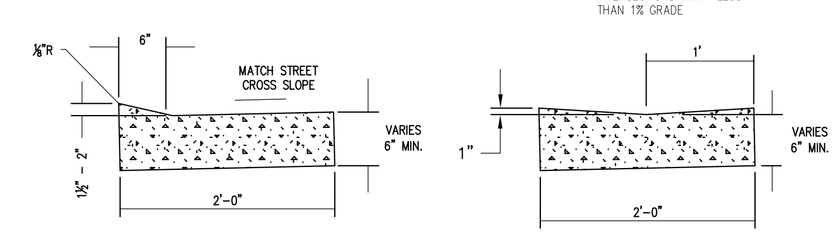

TYPE I

TYPE II

NOTES:
1. CONCRETE FOR CURB AND GUTTER TO BE CLASS A, 3500 PSI, 5.5 BAG MIX WITH 4–7% AIR ENTRAINMENT.

2. ALL CURB AND GUTTER SHALL HAVE A BROOMED FINISH UNLESS OTHERWISE SPECIFIED.

3. MODIFIED CURB (TYPE I) SHALL BE PLACE ACROSS ALL DRIVEWAY ENTRANCES.

4. MODIFIED CURB (TYPE II) SHALL BE PLACED ACROSS ALL SIDE STREETS WHERE THE LONGITUDINAL GRADE IS LESS THAN 1%

5. SAW CUT JOINTS AT 15' O.C. SEAL WITH ONE PART COLD APPLIED SILICONE JOINT SEALER OR OTHER APPROVED SEALANT. ALL JOINTS TO BE SEALED PRIOR TO FINAL ASPHALT PLACEMENT.

6. PROVIDE 1/2" PREFORMED EXPANSION JOINT MATERIAL (ASPHALT IMPREGNATED FIBERBOARD OR OTHER APPROVED MATERIAL) AT STATIONARY STRUCTURES, (DROP INLETS, END OF CURBS, DRIVEWAYS – SEE DETAIL) OR AS DIRECTED BY ENGINEER.

CURB AND GUTTER DETAILS
N.T.S.

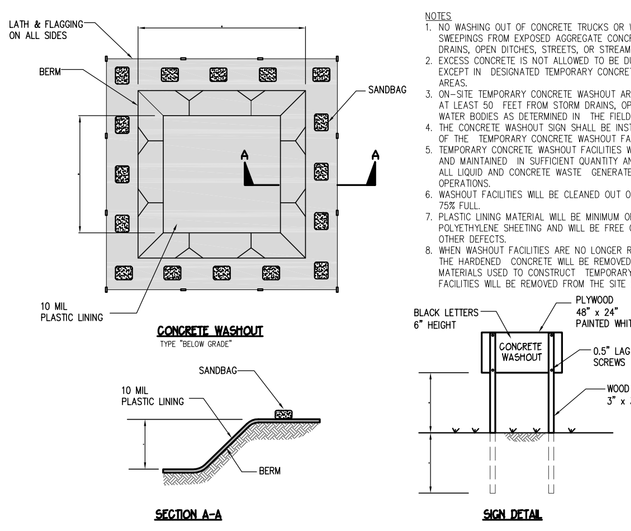

NOTES
1. NO WASHING OUT OF CONCRETE TRUCKS OR WASHING OF SWEEPINGS FROM EXPOSED AGGREGATE CONCRETE INTO STORM DRAINS, OPEN DITCHES, STREETS, OR STREAMS IS ALLOWED.
2. EXCESS CONCRETE IS NOT ALLOWED TO BE DUMPED ON-SITE, EXCEPT IN DESIGNATED TEMPORARY CONCRETE WASHOUT PIT AREAS.
3. ON-SITE TEMPORARY CONCRETE WASHOUT AREAS WILL BE LOCATED AT LEAST 50 FEET FROM STORM DRAINS, OPEN DITCHES, OR WATER BODIES AS DETERMINED IN THE FIELD.
4. THE CONCRETE WASHOUT SIGN SHALL BE INSTALLED WITHIN 30 FT. OF THE TEMPORARY CONCRETE WASHOUT FACILITY.
5. TEMPORARY CONCRETE WASHOUT FACILITIES WILL BE CONSTRUCTED AND MAINTAINED IN SUFFICIENT QUANTITY AND SIZE TO CONTAIN ALL LIQUID AND CONCRETE WASTE GENERATED BY WASHOUT OPERATIONS.
6. WASHOUT FACILITIES WILL BE CLEANED OUT ONCE THE WASHOUT IS 75% FULL.
7. PLASTIC LINING MATERIAL WILL BE MINIMUM OF 10 MIL POLYETHYLENE SHEETING AND WILL BE FREE OF HOLES, TEARS, OR OTHER DEFECTS.
8. WHEN WASHOUT FACILITIES ARE NO LONGER REQUIRED FOR WORK, THE HARDENED CONCRETE WILL BE REMOVED AND DISPOSED OF. MATERIALS USED TO CONSTRUCT TEMPORARY CONCRETE WASHOUT FACILITIES WILL BE REMOVED FROM THE SITE AND DISPOSED OF.

CONCRETE WASTE MANAGEMENT DETAIL
N.T.S.

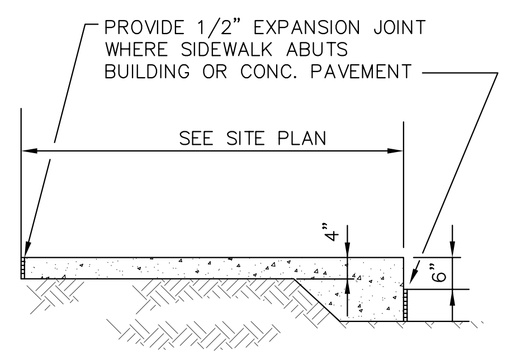

TYP. SIDEWALK SECTION
N.T.S.

ALL SIDEWALK SHALL BE CONSTRUCTED OF PORTLAND CONCRETE WITH A MINIMUM 28 DAY COMPRESSIVE STRENGTH OF 3,500 PSI WHEN TESTED. ALL CONCRETE SHALL CONTAIN AN AIR ENTRAINING AGENT WHICH PRODUCES FIVE PERCENT PLUS OR MINUS TWO PERCENT AIR ENTRAINMENT IN THE CONCRETE.

EXPANSION JOINTS SHALL BE PROVIDED AT 25 FOOT INTERVALS, AT ALL STATIONARY STRUCTURES SUCH AS DROP INLETS, AND AT CURB RETURNS. JOINT MATERIAL SHALL HAVE A THICKNESS OF ONE–HALF INCH AND CONFORM TO AASHTO M 213 STANDARDS.

SIDEWALKS MUST HAVE CONTRACTION JOINTS SAWED EVERY 5 FEET ON CENTER, AND SHALL BE SAWED TO A DEPTH OF 1½" WITH A WIDTH OF ¼". MATERIAL USED TO SEAL JOINTS SHALL BE AS SPECIFIED IN SECTION 501 AHTD STANDARD SPECIFICATIONS OR AS APPROVED BY THE ENGINEER. (OMNISEAL 50 OR EQUAL.).

ALL MATERIALS AND CONSTRUCTION SHALL COMPLY WITH CITY REQUIREMENTS. IN THE CASE OF CONFLICTS, THE CITY'S CRITERIA SHALL GOVERN.

STATE OF ARKANSAS
REGISTERED PROFESSIONAL ENGINEER
No. 9810
GEOFFREY H. BATES

CERTIFICATE OF AUTHORIZATION
BATES & ASSOCIATES, INC.
#1335
ARKANSAS ENGINEER

ENGINEER: G. Bates
DRAWN BY: J. Young

Copyright 2015, Bates and Associates, Inc.

REVISIONS	DATE
FIRST SUBMITTAL	08/26/15
REVISIONS PER 9/10/15 TECHNICAL PLAT REVIEW	09/17/15

LAKESIDE AT HAR–BER
LARGE SCALE DEVELOPMENT PLANS
L15–18
SITE DETAILS
SPRINGDALE, ARKANSAS

Bates & Associates, Inc.
www.nwabatesinc.com
Civil Engineering & Surveying
91 W. Colt Square Dr. Suite 3
Fayetteville, Arkansas 72703
Phone - 479.442.9350 Fax 479.521.9350

PROJECT NO
15–201

DRAWING NO
06

Time: 9:42 am
Scale: 1:1 (1:50)
Date: 3/14/2014
Drawing Name: 13\300\13-352\Engineering\05 Details.dwg
Xrefs Used: COA, BBA, BATES-AR, 24X36

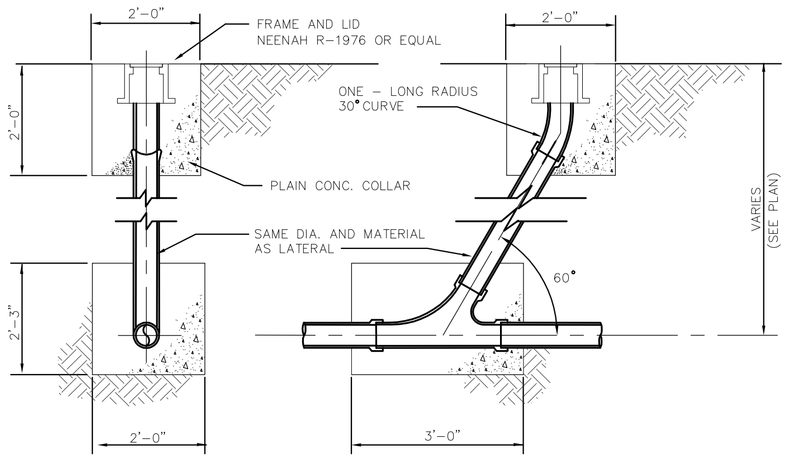

TYP. SANITARY SERVICE CLEANOUT

N.T.S.

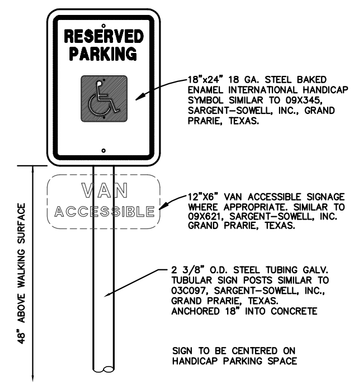

AMERICANS WITH DISBILITIES ACT (4.6.4)

HANDICAP SIGN

N.T.S.

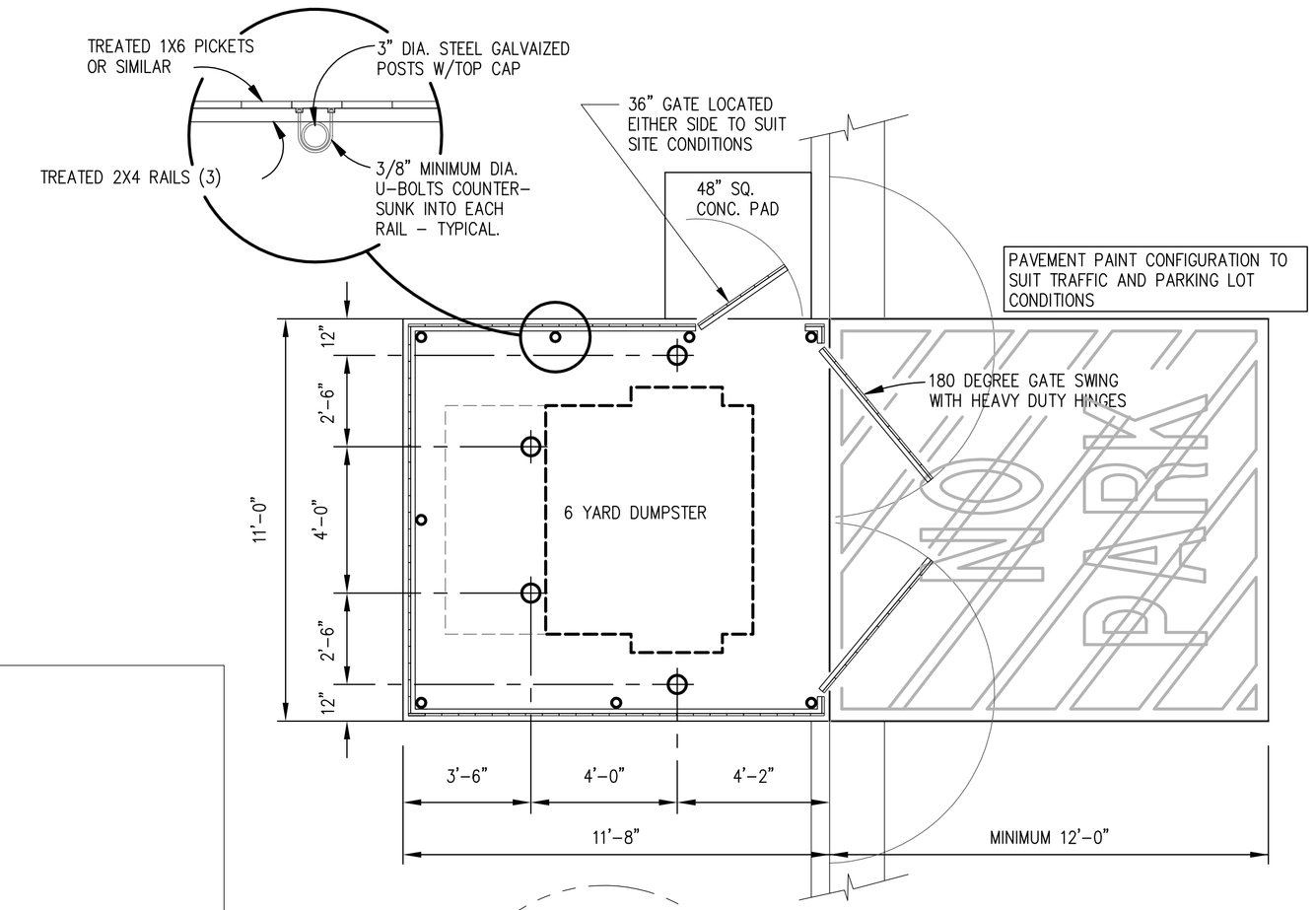

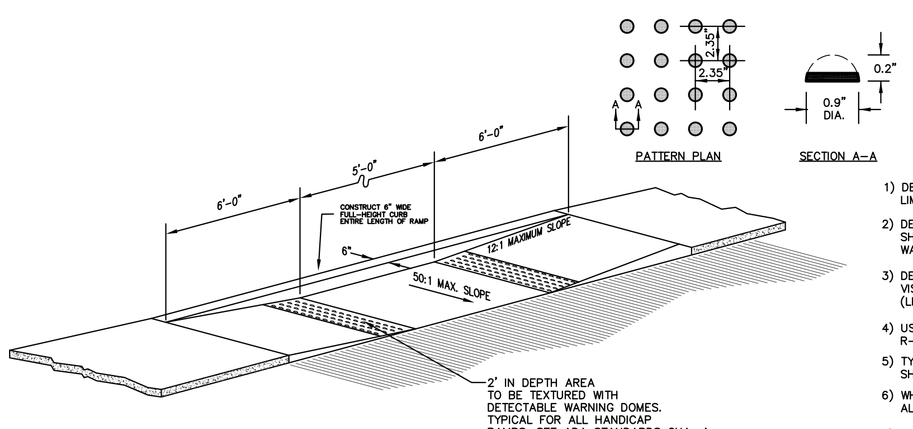

1) DETECTABLE WARNING DOMES TO BE LIMITED TO RAMP SURFACES ONLY.

2) DETECTABLE WARNING DOME MATERIAL SHALL BE AN INTEGRAL PART OF WALKING SURFACE.

3) DETECTABLE WARNING SHALL CONTRAST VISUALLY WITH ADJOINING SURFACES (LIGHT-ON-DARK OR DARK-ON-LIGHT)

4) USE NEENAH DETECTABLE WARNING PLAT R-4984 OR EQUAL. WWW.NFCO.COM

5) TYPICAL SIDEWALK CROSS SLOPE SHALL NOT EXCEED 2% MAXIMUM.

6) WHEELCHAIR RAMPS WILL BE CONSTRUCTED ALONG WITH STREETS.

7) DETECTABLE WARNING DOMES SHALL CONSIST OF TRUNCATED DOMES.

HANDICAP RAMP
W/DETECTABLE WARNING/TRANSITION TRUNCATED DOMES

N.T.S.

AMERICANS WITH DISIBILITIES ACT (4.7.7)

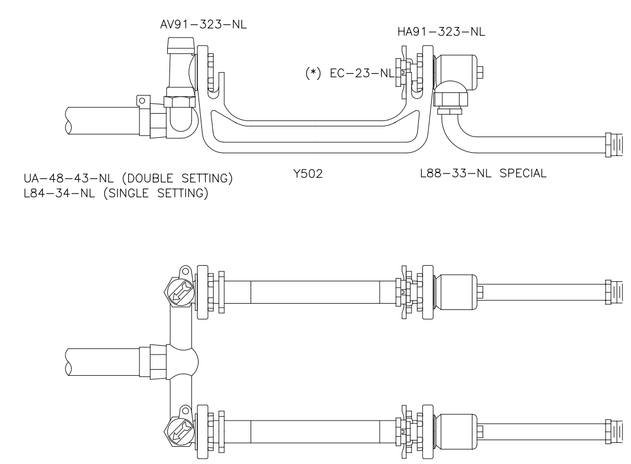

TYPICAL 5/8" DOUBLE METER SETTING

YOKE ASSEMBLY, 5/8" X 3/4" METER
3/4" COPPER OR PE P.J. TO 3/4" CTS PLASTIC OR MIP

N.T.S.
S-25

NOTES:

ALL MATERIALS INSTALLED IN POTABLE WATER SYSTEMS ARE REQUIRED TO COMPLY WITH THE FEDERAL DEFINITION OF "LEAD FREE" CONTAINED IN PUBLIC LAW 111-380.

•METER AND EXPANSION CONNECTION EC-23-NL ARE PROVIDED BY THE DEPARTMENT.

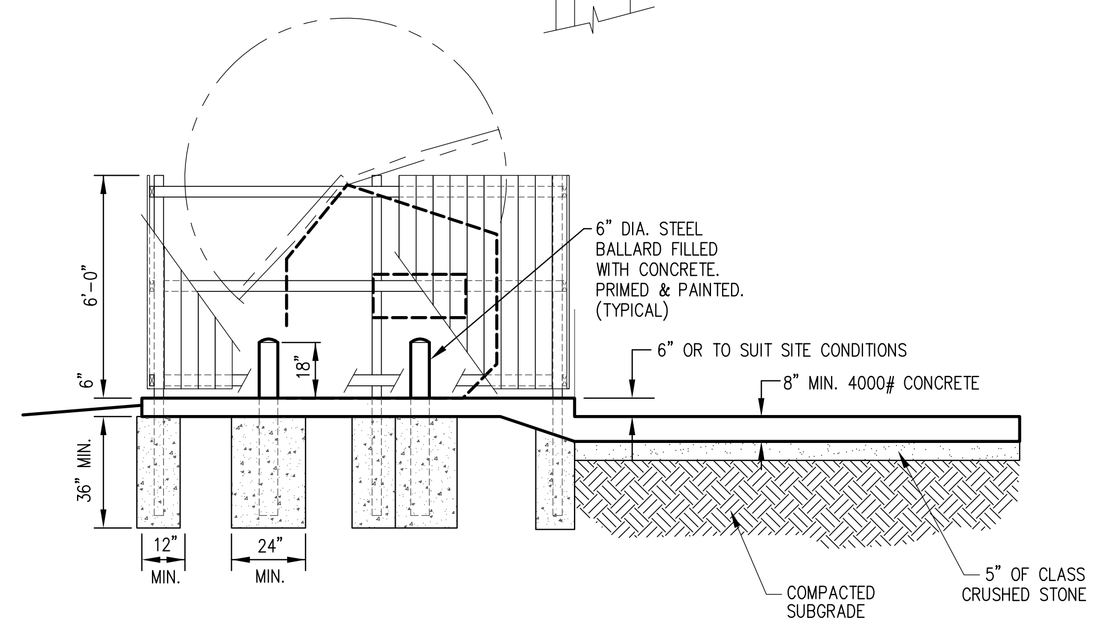

GENERIC SCREENED DUMPSTER

N.T.S.

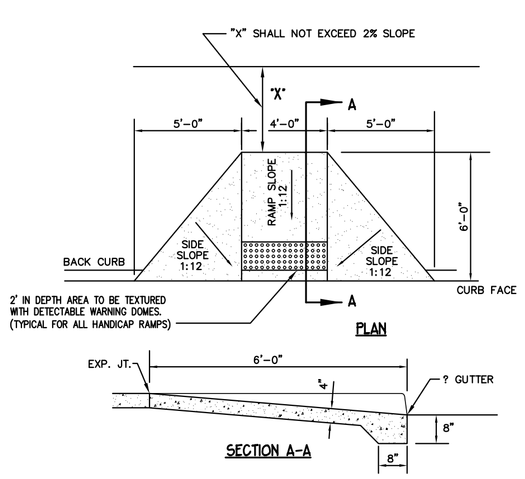

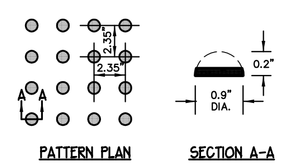

1) DETECTABLE WARNING DOMES TO BE LIMITED TO RAMP SURFACES ONLY.

2) DETECTABLE WARNING DOME MATERIAL SHALL BE AN INTEGRAL PART OF WALKING SURFACE.

3) DETECTABLE WARNING DOMES TO BE PAINTED WITH CONTRASTING COLORS, EITHER LIGHT ON DARK OR DARK ON LIGHT.

4) USE COTE-L INDUSTRIES, INC., OF TEANECK, N.J., MANUFACTURER OF "SAFTI-TRAX" & "SAFTI-TRAX MATS" OR EQUAL TEL: 201-836-0733 FAX: 201-836-5220 OR http://www.cotelind.com

5) TYPICAL SIDEWALK CROSS SLOPE SHALL NOT EXCEED 2% MAXIMUM.

6) ALLIGHN DETECTABLE WARNING DOME AREA WITH BACK OF CURB.

HANDICAP/PEDESTRIAN RAMP DETAIL
W/DETECTABLE WARNING/TRANSITION TRUNCATED DOMES

N.T.S.

SINGLE SETTING MATERIAL LIST

QTY	DESCRIPTION	CATALOG NUMBER FORD	MUELLER	AY McDONALD
1	INLET CONNECTION	L84-34-NL	P-15531N	74779M-22 1X3/4
1	YOKE ANGLE KEY VALVE	AV91-323-NL	H-14278N	74604Y 3/4X02
1	YOKE BAR	Y502	H-5020	14-2
1	YOKE ANGLE CHECK VALVE	HA91-323-NL	H-14248N	702-3YE 33
1	OUTLET CONNECTION	L88-33-NL SPECIAL	H-15538N	710JPP 33X90X8
1	METER BOX ASSEMBLY	34P-18X24X24D W/LID		

DOUBLE SETTING MATERIAL LIST

1	ANGLE U BRANCH	UA48-43-65-NL	P-15369N	708T2M 1X3/4X6.5
2	YOKE ANGLE KEY VALVE	AV91-323-NL	H-14278N	74604Y 3/4X02
2	YOKE BAR	Y502	H-5020	14-2
2	YOKE ANGLE CHECK VALVE	HA91-323-NL	H-14248N	702-3YE 33
2	OUTLET CONNECTION	L88-33-NL SPECIAL	H-15538N	710JPP 33X90X8
1	METER BOX ASSEMBLY	34P-18X24X24D W/LID		

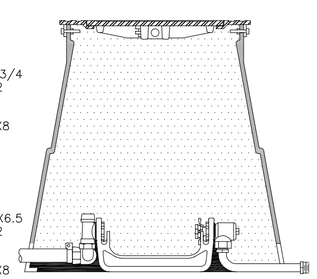

STATE OF ARKANSAS
REGISTERED PROFESSIONAL ENGINEER
No. 9810
GEOFFREY H. BATES

CERTIFICATE OF AUTHORIZATION
BATES & ASSOCIATES, INC.
#335
ARKANSAS ENGINEER

ENGINEER: G. Bates
DRAWN BY: J. Young

Copyright 2015, Bates and Associates, Inc.

REVISIONS	DATE
FIRST SUBMITTAL	08/26/15
REVISIONS PER 9/10/15 TECHNICAL PLAT REVIEW	19/17/15

LAKESIDE AT HAR-BER
LARGE SCALE DEVELOPMENT PLANS
L15-18
SITE DETAILS
SPRINGDALE, ARKANSAS

Bates & Associates, Inc.
www.nwabatesinc.com
Civil Engineering & Surveying
91 W. Colt Square Dr. Suite 3
Fayetteville, Arkansas 72703
Phone - 479.442.9350 Fax 479.521.9350

PROJECT NO
15-201

DRAWING NO
07

Time: 9:42 am
Scale: 1:1 (1:50)
Date: 5/14/2014
Drawing Name: 13\300\13-352\Engineering\05 Details.dwg
Xrefs Used: COA BBA, BATES-AR, 24X36

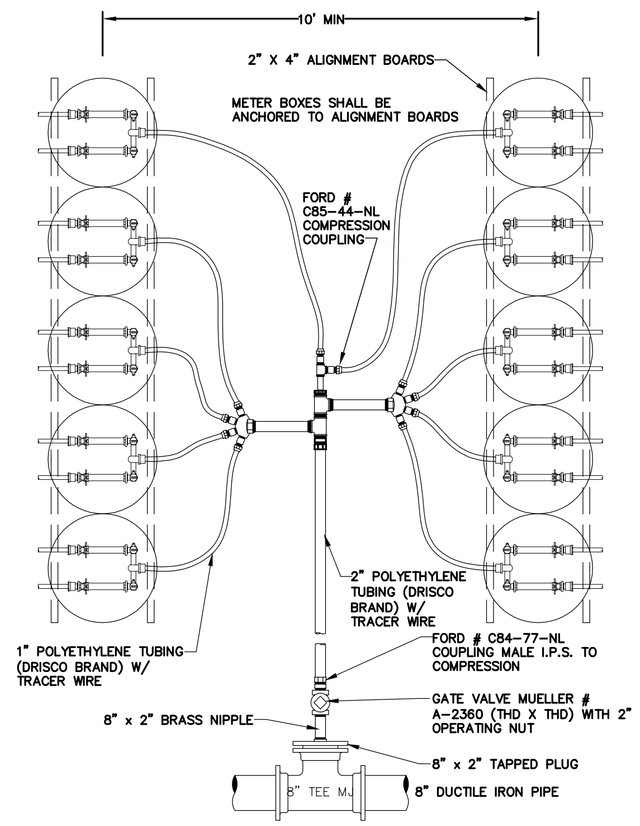

M-9 METER ARRAY

N.T.S.

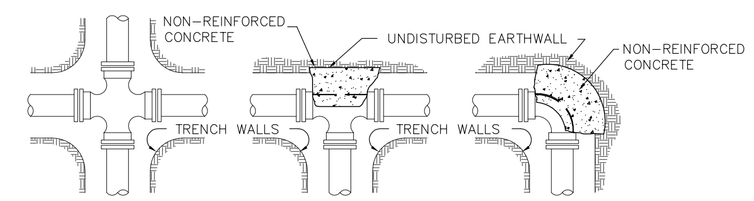

CROSS TEE 90° BEND

45° BEND SIMILAR

22 1/2° BEND SIMILAR

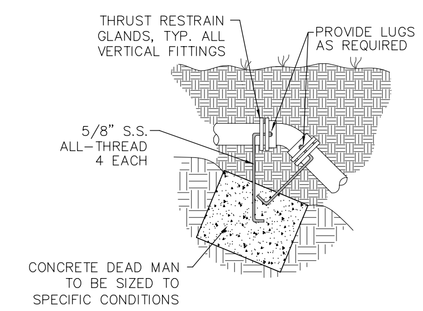

TYPICAL VERTICAL BEND

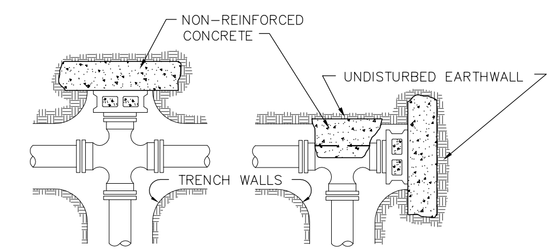

CROSS W/PLUG TEE W/PLUG

NOTES:

1. ALL FITTINGS SHALL BE MECHANICAL JOINTS, UNLESS OTHERWISE SPECIFIED.
2. DO NOT COVER BELLS OR FLANGES WITH CONCRETE.
3. WRAP ALL FITTINGS WITH POLYETHYLENE AS SPECIFIED.
4. BACK ALL TEES ACCORDING TO SIZE OF BRANCH.
5. BACKING FOR FUTURE LINE EXTENSIONS SHALL BE SUCH THAT REMOVAL OF BACKING IS POSSIBLE IN THE FUTURE.
6. ALL BENDS WHERE FITTINGS ARE USED, BOTH HORIZONTAL AND VERTICAL, SHALL BE BACKED.
7. THE REACTION BACKING TABLE IS BASED ON 150 PSI AND A SOIL BEARING PRESSURE OF 2,500 LB/SQ FT. ADDITIONAL BACKING MAY BE REQUIRED IN SOME AREAS AS DIRECTED BY THE ENGINEER.

REACTION BACKING TABLE

SIZE	REQUIRED SQ. FT. OF UNDISTURBED EARTHWALL FOR REACTION BACKING			
	TYPE OF FITTINGS			
	TEE	90°	45°	22 1/2°
2"	1	1	1	1
3"	1	1	1	1
4"	1	2	1	1
6"	3	3	2	1
8"	4	4	3	2
10"	7	7	4	2
12"	10	10	5	3
14"	13	13	7	4
16"	17	17	9	5
18"	21	21	12	6
20"	26	26	14	7
24"	38	38	20	10
30"	59	59	32	16
36"	85	85	46	23

REACTION BACKING

N.T.S.
S-3

NOTE:

ALL HYDRANTS TO BE SET PLUMB W/PUMPER NOZZLE FACING STREET OR AS DIRECTED BY S.W.U. ENGINEER.

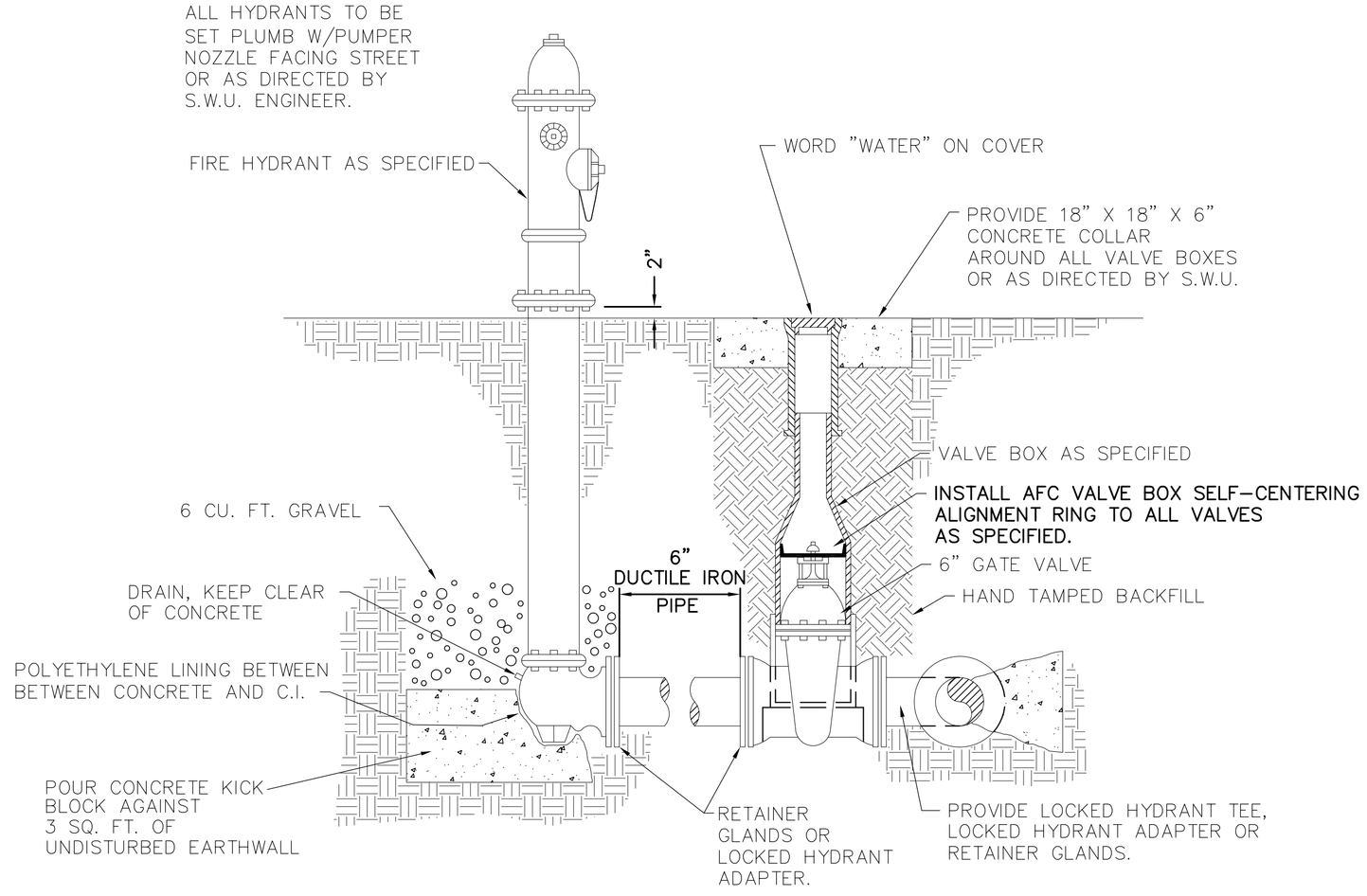

FIRE HYDRANT & GATE VALVE

N.T.S.
S-1

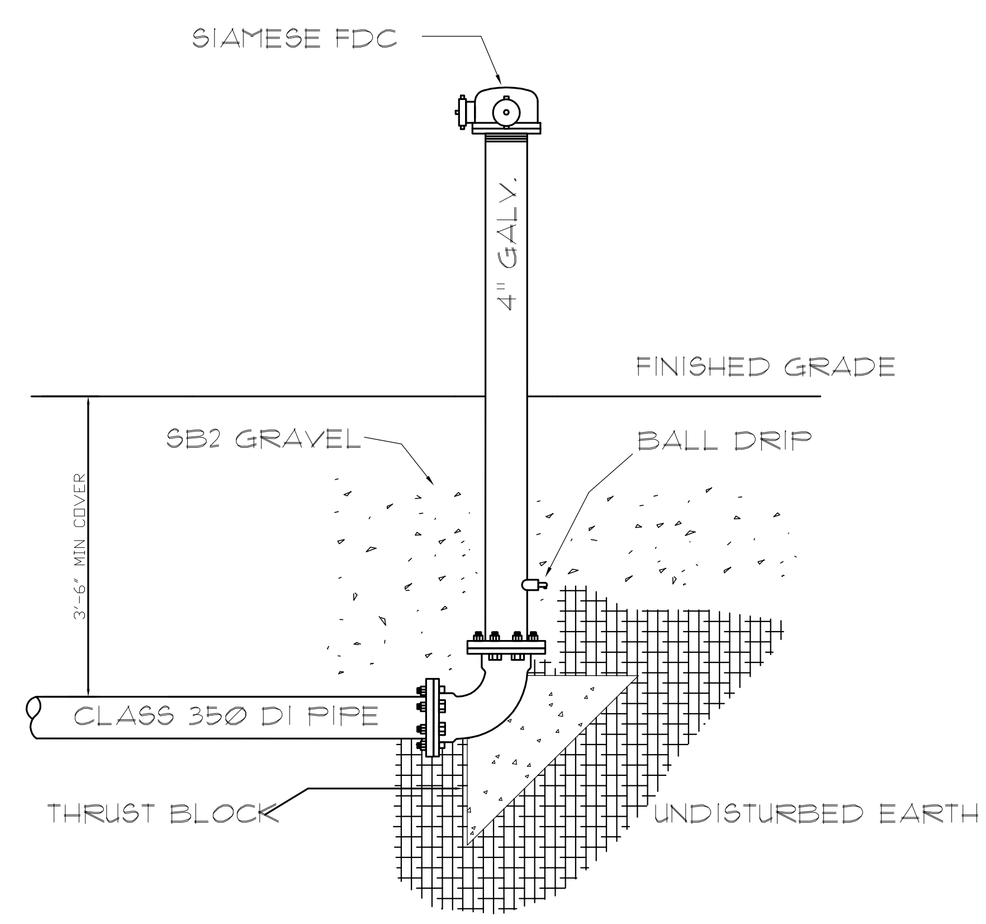

FDC DETAIL

NTS

STATE OF ARKANSAS
REGISTERED PROFESSIONAL ENGINEER
No. 9810
GEOFFREY H. BATES

CERTIFICATE OF AUTHORIZATION
BATES & ASSOCIATES, INC.
#1335
ARKANSAS ENGINEER

ENGINEER: G. Bates
DRAWN BY: J. Young

Copyright 2015, Bates and Associates, Inc.

REVISIONS	DATE
FIRST SUBMITTAL	08/26/15
REVISIONS PER 9/10/15 TECHNICAL PLAT REVIEW	19/17/15

LAKESIDE AT HAR-BER
LARGE SCALE DEVELOPMENT PLANS
L15-18
SITE DETAILS
SPRINGDALE, ARKANSAS

Bates & Associates, Inc.
www.nwabatesinc.com
Civil Engineering & Surveying
91 W. Colt Square Dr. Suite 3
Fayetteville, Arkansas 72703
Phone - 479.442.9350 Fax 479.521.9350

PROJECT NO
15-201

DRAWING NO
08

Time: 9:42 am
Scale: 1:2 (PS)
Date: 3/14/2014
Drawing Name: 13\300\13-352\Engineering\05 Details.dwg
Xrefs Used: COA-BRA, BATES-AR, 24X36

Staff Use Only

☐ Fee Paid ($75) ☐ Cash ☐ Check ☐ CC
☐ Warranty Deed
☐ Authorization of Representation
☐ Drawing/Photo or Other Exhibit

File # B1604

☐ *A "Notice of Violation" was issued to the Applicant/Property Owner by Code Enforcement.*

APPLICATION FOR VARIANCE
ZONING BOARD OF ADJUSTMENT
SPRINGDALE PLANNING COMMISSION
CITY OF SPRINGDALE, ARKANSAS

Applicant's Name: Michael Pennington – Gateway Homes, LLC

Applicant's Mailing Address:

P.O. Box 6095
Street Address or P.O. Box

479-957-5422
Telephone Number

Springdale, AR 72766
City, State & Zip Code

Property Owner's Name
(If different from Applicant): Michael Pennington

Property Owner's Mailing Address:
(If different from Applicant):

Same as Applicant

Address of Variance Request: Lynch's Prairie Cove (Lot 2 Block 43, Har-Ber Meadows Phase IX)

Zoning District: Har-Ber PUD

The following information should be attached to this application:

1. $75.00 Fee
2. Warranty Deed
3. Authorization of Representation *(If the Property Owner will not be present at the meeting.)*
4. Drawings, Photos, or Other Exhibit
5. The applicant shall be responsible for providing the name and address of all adjacent property owners. This must be a certified list by a licensed abstractor or licensed land surveyor within the past sixty (60) days. The notice to all

adjacent property owners must be sent by certified mail, return receipt requested at least ten (10) days prior to the Planning Commission meeting. Evidence in the form of a signed Affidavit, that notice has been given to all adjacent property owners by certified mail, return receipt requested, will be submitted. Notification should be sent after the Planning Department has accepted the application and the date of the public hearing has been confirmed.

6. The required Affidavit and supporting exhibits (mailing receipts, list of property owners of record and copy of notice) shall be filed with the Planning Office no later than seven (7) days prior to the meeting date.

SETBACK VARIANCES: ☐ *Not Applicable*

Please complete the following to apply for a setback variance. Required setbacks vary by zoning district, please ***contact staff*** *to determine the required setback.*

Required: Front:_____ Side:_____ Back:_____
(This is the minimum required by the Springdale Code of Ordinance)

Requested: Front:_____ Side:_____ Back:_____
(if granted what the setback would be.)

Variance: Front:_____ Side:_____ Back:_____
(The difference between the "Required" and the "Requested" setback)

VARIANCES OTHER THAN SETBACK: ☐ *Not Applicable*

Use the space below to describe the variance request. If possible please reference the applicable section of the Springdale Code of Ordinance. Attach a separate sheet if needed.

The Petitioner is seeking a variance from the Multi-Family Design Standards Site Planning requirements of a Multi-Family Play Area, Common Open Space, and On-Site Community Recreational Amenities (Multi-Family Design Guidelines and Standards III.A.2, 3, & 4). The Petitioner is also seeking a variance from the Perimeter Landscaping Requirements (Ch. 56, Section 31.3).

The Zoning Board of Adjustment, after a hearing, may vary the application of certain provisions of the Springdale Code of Ordinance. The variance can be granted when, in the Board's opinion, the specific case will not be contrary to public interest, where, owing to special conditions, a literal enforcement of the provisions of the ordinance would result in unnecessary hardship, and also finds ***ALL of the following:***

1. **That special conditions and circumstances exist which are particular to the land, structure, or building involved and which are not applicable to other lands, structures, or buildings in the same district.**

   Multi-Family Design Standards:

   Multi-Family Play Area – This development is intended for residents of age 60 and older, and is next door to an assisted-living facility, therefore a required Play Area is unnecessary for the development's proposed use. The topography of the undeveloped portion of the lot is also not conducive to constructing a 2,500 square foot play area.

   Common Open Space – A large portion of the southern area of the lot contains a drainage swale. Per the Design Standards, this area cannot be counted towards the Common Open Space requirements unless it is determined by the City that the area is useful for recreation. The Petitioner submits that this area and the lake area in the Har-Ber Property Owner's Association-owned property to the west provide adequate fulfillment of the recreational requirement.

   On-Site Community Recreational Amenities – Within the vicinity of this project, there is a swimming pool, a resident clubhouse, a playground, multiple park areas with gazebos/pavilions, picnic tables, etc. As this development is only required to have one amenity, the Petitioner feels that the Har-Ber Meadows PUD provides more than what is required for Recreational Amenities.

Perimeter Landscaping Requirements:

Along the western boundary is a nice lake and open common area to be used by the residents of the Har-Ber Meadows PUD. The apartment building was sited along the western property so there are views of the green from the balconies of the properties. These homes will be marketed toward an aging demographic, so it would be wonderful if they could see out over the lake without having to venture out as often.

Along the eastern boundary there is a nicely landscaped property with shrubs. This property is also at the end of the street where there would be less visibility from other external properties.

The owner is, however, proposing to install perimeter trees along the rear of the property.

2. **That the literal interpretation of the provision of the Springdale Code of Ordinance would deprive the applicant of rights commonly enjoyed by other properties in the same district.**

Multi-Family Design Standards:

Multi-Family Play Area – The Petitioner feels that as the Har-Ber PUD provides children's play areas, and no other surrounding developments have play areas (including the Church of Jesus Christ of Latter-Day Saints that is within the immediate vicinity of the proposed development), that this requirement would place an undue burden on the developer that has not been placed on any other development in the area.

Common Open Space – The Petitioner feels that this development should be able to utilize the Common Areas as set forth by the Har-Ber PUD to fulfill this requirement. There is ample space in the immediate vicinity that can be, and is currently used as, recreation areas. This property is already dedicated as common property and is owned by the Har-Ber Property Owner's Association.

On-Site Community Recreational Amenities – The Petitioner feels that this proposed development should be able to use the amenities that are already in the vicinity to fulfill this requirement. Other nearby properties in Har-Ber Meadows have not been required to install separate Recreational Amenities. The PUD established these amenities, and the further requirement of more amenities would be redundant and an unnecessary expense to the developer.

Perimeter Landscaping Requirements:

Literal interpretation would force the owner to install some 28 trees along it boundary when no other properties in the area have done so. The owner will though install 6 perimeter trees along the drainage swale as perimeter trees.

3. **That the special conditions and circumstances do not result from the actions of the applicant.**

Multi-Family Design Standards:

Multi-Family Play Area – The granting of a variance from the requirement of a multi-family play area is a case of limited space, unsuitable topography, and that a Play Area would not be utilized by the residents. No action taken by the Developer resulted in this hardship.

Common Open Space – The need of a variance from Common Open Space requirements results from the existence of a large drainage easement and swale on the southern end of the property that cannot be used to meet this requirement. It also results from the fact that the Har-Ber Meadows PUD provides ample open space in the form of lakes and parks, much of which is within the immediate vicinity of the property. There was no action taken by the Developer that resulted in this hardship.

On-Site Community Recreational Amenities – A variance from the requirement of On-Site Community Recreation Amenities would not be the result of any action taken by the Developer. Rather, the existence and establishment of ample recreation amenities as a part of the Har-Ber PUD, many that are in the immediate vicinity of the proposed development, negates the need for additional amenities.

Perimeter Landscaping Requirements:

The special conditions are the result of general idea of the Har-Ber community being one whole. The intent of the landscape ordinance is to provide separation from properties and protection from incompatible uses. The intent of the PUD, however, is not to provide separation, but allow the properties to be compatible with one another.

This along with the fact that no other properties in the area have not completed perimeter landscaping to this extent makes these circumstances not the result of the applicant's actions.

VERIFICATION

I/We, the undersigned, herewith state on solemn oath that we have read the above and foregoing application for rezoning and that all the facts, statements, and allegations therein contained are true and correct to the best of my knowledge and belief and that complete disclosure of all material facts have been made.

Michael Pennington

Applicant Signature*

Property Owner Signature*
(If different from Applicant)

Applicant Signature*

Property Owner Signature*
(If different from Applicant)

**If the Applicant or Property Owner is a Trust (Living, Revocable, etc.) or a corporation (Inc., LLC, LLP, etc) or another type organization provide staff with documentation stating that the person signing the application is authorized to do so.*

State of Arkansas)
) ss.
County of Washington)

SUBSCRIBED AND SWORN TO before me, a Notary Public, this 16th day of December, 20 15.

Notary Public

EMBRY ROBERTS
NOTARY PUBLIC
...GTON COUNTY - ARKANSAS
MISSION NO. 12358206
RES: JANUARY 1, 2017

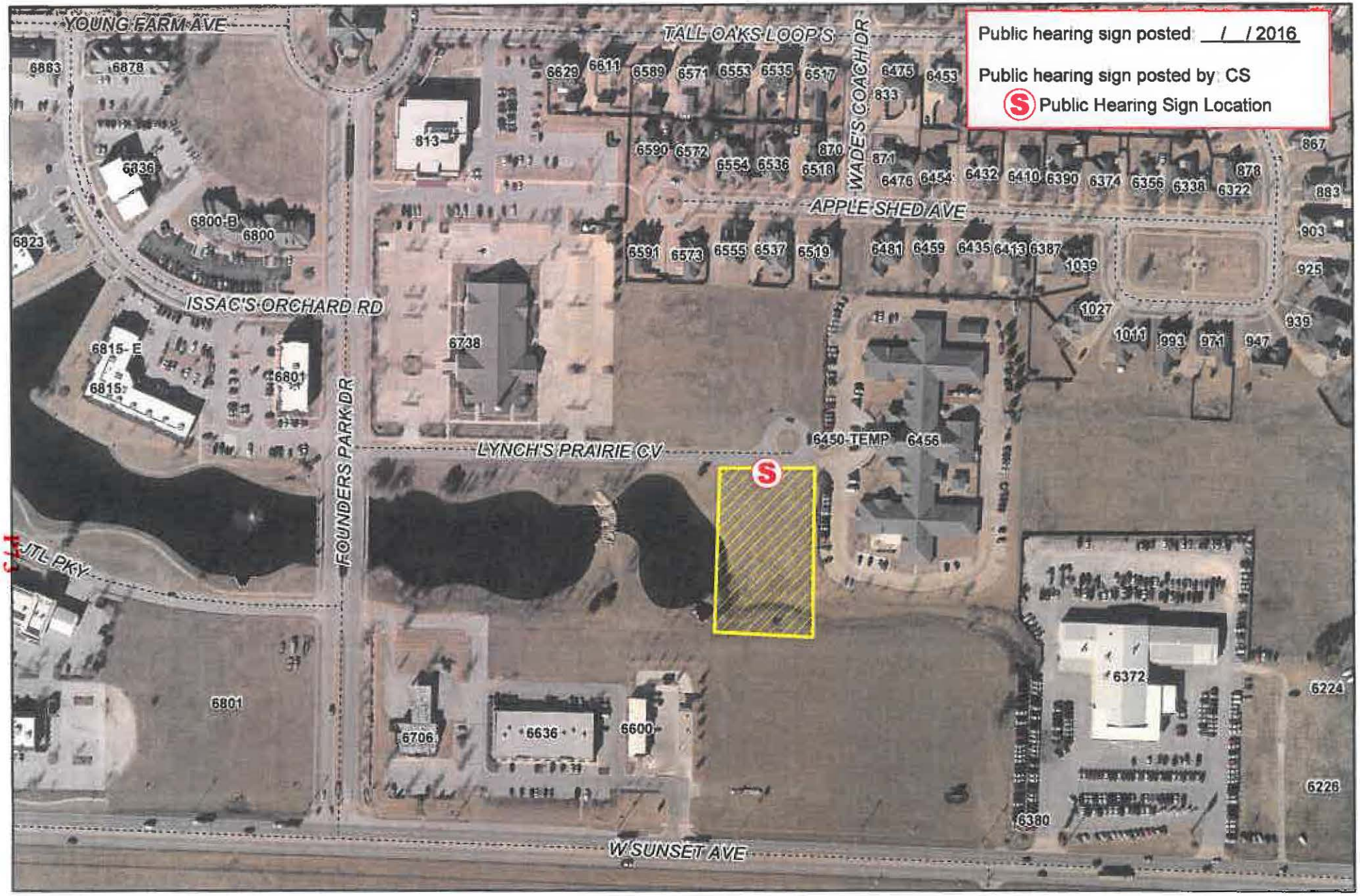

Feet
0 100 200
N

FILE NUMBER: B16-04
APPLICANT: GATEWAY HOMES
VARIANCE REQUEST: MODIFICATION OF LANDSCAPING AND MULTIFAMILY DESIGN STANDARDS

CITY OF SPRINGDALE
PLANNING OFFICE
PLANNING COMMISSION MEETING

Planning and Community Development Division City of Springdale

Memo

To: Planning Commission

From: Staff

Date: January 5, 2016

RE: **L16-01** **Large Scale Development** **Star Mechanical**

Concept of Detention

Planning Comments

1. All comments from the utility companies and other city departments must be addressed prior to approval of construction plans.

Engineering Comments

1) ***Parking***

   a. All drives and parking areas are required to be paved.

2) **The concept of detention** must be approved by the Planning Commission.

3) ***DCM Section 5.4.10*** *"An easement shall be provided in Plans for detention facilities. A minimum 20' wide drainage easement shall be provided around the 100-year flood pool, connecting the tributary pipes and the discharge system along the most passable routing of piping system."* Ownership of the detention facility will remain with the land .

4) Sect 107 The site area of disturbance is greater than 1 acre. A storm Water Pollution Prevention Plan, Grading Permit Application and $500.00 fee, in accordance with Chapter 107, must be submitted to the Planning Office prior to final approval of construction plans. See Applications & Forms / Grading at http://www.springdalear.gov/department/planning_and_community_development/

N:\Planning\Debbie\Forms\MemoPC.doc

4. Sect 107 The site area of disturbance is greater than 1 acre. A storm Water Pollution Prevention Plan, Grading Permit Application and $500.00 fee, in accordance with Chapter 107, must be submitted to the Planning Office prior to final approval of construction plans. See Applications & Forms / Grading at http://www.springdalear.gov/department/planning_and_community_development/

PLANS FOR A

LARGE SCALE DEVELOPMENT

TO SERVE

STAR MECHANICAL SUPPLY INC

INDEX OF SHEETS	
SHEET No.	DESCRIPTION
1	OVERALL SITE PLAN
2	LARGE SCALE DEVELOPMENT
3	TYPICAL DETAILS
4	STORM WATER POLLUTION PREVENTION PLAN

ARKANSAS ONE CALL SYSTEM, INC.
1-800-482-8998
STOP-CALL BEFORE YOU DIG!

AN INDUSTRIAL DEVELOPMENT

IN THE CITY OF

SPRINGDALE, ARKANSAS

L 16-01

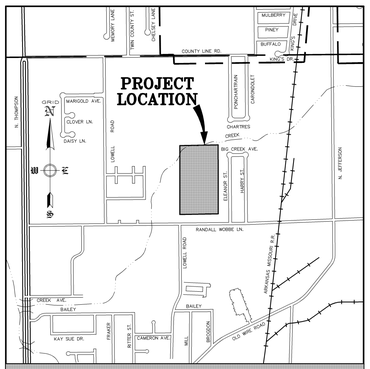

VICINITY MAP
N.T.S.

DECEMBER 16, 2015

BY

ENGINEERING SERVICES INC.

CONSULTING ENGINEERS

SPRINGDALE, ARKANSAS

PHONE: 479-751-8733

FAX: 479-751-8746

WWW.ENGINEERINGSERVICES.COM

REVIEW OF THESE PLANS IS LIMITED TO COMPLIANCE WITH CITY CODES AND REGULATIONS. BY REVIEWING AND APPROVING THESE PLANS THE REVIEWER AND THE CITY OF SPRINGDALE ASSUME NO RESPONSIBILITY FOR ANY ERRORS OR OMISSIONS IN THE PLANS. THE ADEQUACY OF THE PLANS IS THE SOLE RESPONSIBILITY OF THE DESIGN ENGINEER HOWEVER, THE CITY OF SPRINGDALE RESERVES THE RIGHT TO REQUIRE CORRECTIVE ACTION, IF ANY INADEQUACIES ARE FOUND AFTER THE IMPROVEMENTS ARE CONSTRUCTED.

THOMAS J. APPEL, P.E. No. 13828
ENGINEERING SERVICES, INC.

NOTES :

1) ALL STREET AND DRAINAGE CONSTRUCTION MUST COMPLY WITH THE REQUIREMENTS OF THE CITY OF SPRINGDALE, ARKANSAS, AS CONTAINED IN CHAPTER 110, ART. III, OF THE CODE OF ORDINANCES, CITY OF SPRINGDALE, ARKANSAS.

2) ALL WATER AND SEWER CONSTRUCTION MUST COMPLY WITH THE SPECIFICATION REQUIREMENTS FOR THE CONSTRUCTION OF WATER AND SEWER FACILITIES OF THE CITY OF SPRINGDALE WATER UTILITIES.

3) ALL BUILDINGS SHALL BE DESIGNED ACCORDING TO THE 2015 SPRINGDALE, ARKANSAS ORDINANCES
CHAPTER 22, ARTICLE II.
SUPPLEMENT 91– CODIFIED THROUGH ORDINANCE NO. 4956,
ENACTED SEPTEMBER 8, 2015.
UPDATED ON OCTOBER 30, 2015.

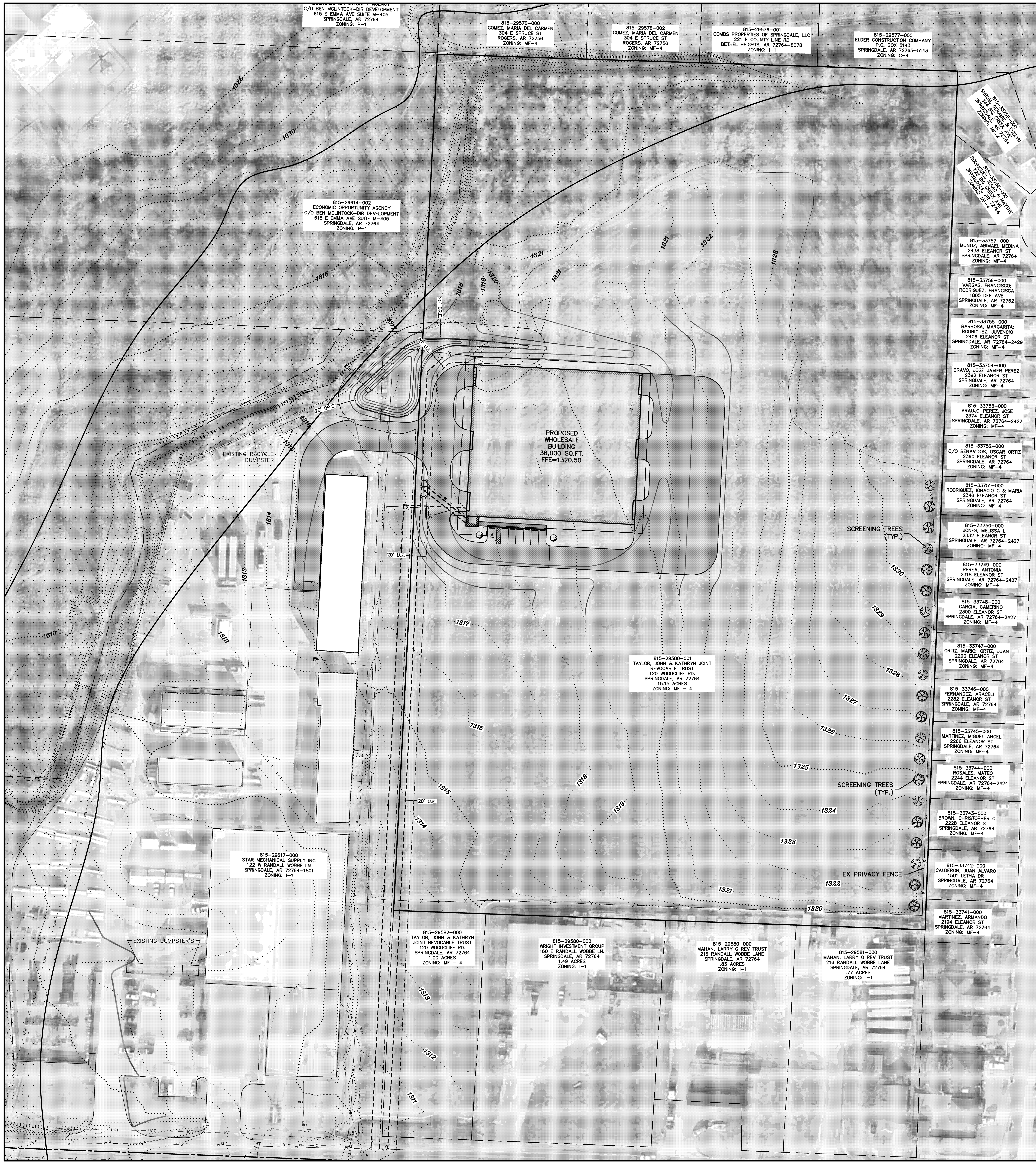

LEGEND

- IRON PIN FOUND
- CONTROL POINT
- PROPERTY LINE
- EX. CURB & GUTTER
- EX. CONTOUR
- EX. CONTOUR
- EX. FENCE LINE
- EX. UNDERGROUND POWER LINE
- EX. OVERHEAD POWER LINE
- EX. OVERHEAD POWER & CABLE LINE
- EX. 15" SEWER LINE
- EX. GAS LINE
- EX. UNDERGROUND TELEPHONE LINE
- EX. STORM DRAIN LINE
- EX. CABLE LINE
- EX. 6" WATER LINE
- EX. FIBER OPTIC LINE
- EX. WATER METER
- EX. FIRE HYDRANT
- EX. SEWER MANHOLE
- EX. POWER POLE
- EX. WATER VALVE
- EX. GAS METER
- EX. TELEPHONE PEDESTAL
- EX. POWER JUNCTION BOX
- EX. LIGHT POLE
- EX. SIGN
- 1348.64 PROPOSED SPOT ELEVATION

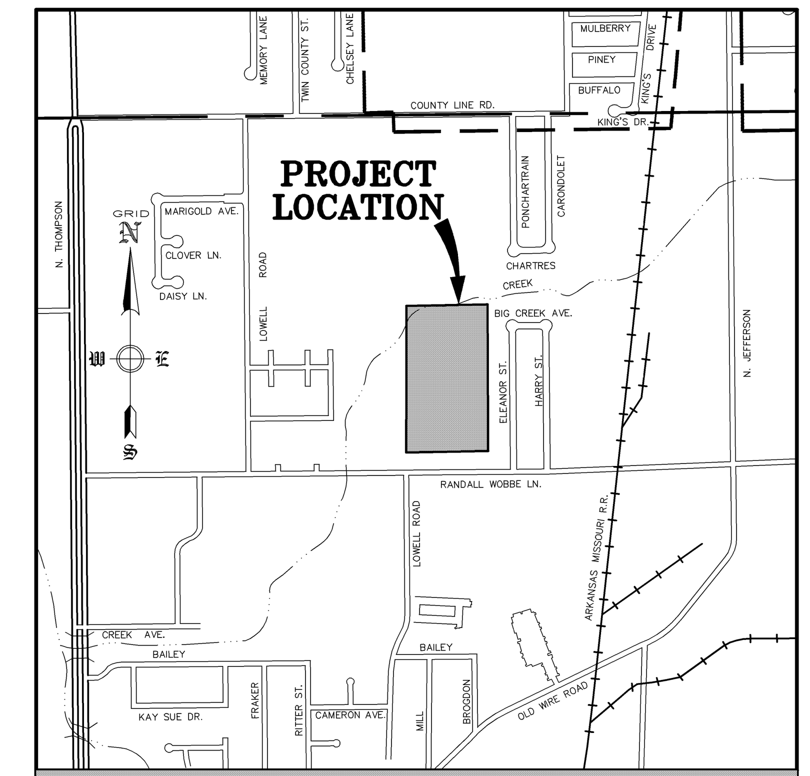

VICINITY MAP
N.T.S.

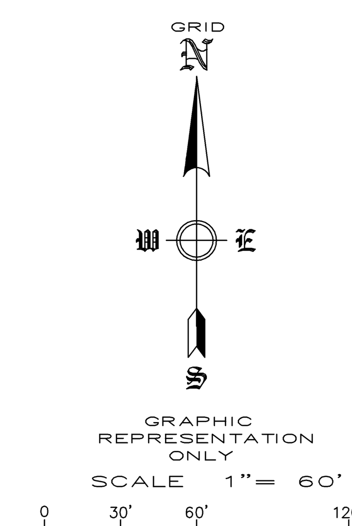

DEVELOPER: STAR MECHANICAL SUPPLY INC.
122 RANDALL WOBBE LN.
SPRINGDALE, AR 72764

ENGINEER: ENGINEERING SERVICES, INC.
1207 S. OLD MISSOURI RD.
P.O. BOX 282
SPRINGDALE, AR 72765-0282

ZONING: I-1

GROSS AREA: PARCEL # 815-29580-001
15.45 ACRES

PARCEL # 815-29582-000
1.00 ACRES

PROPOSED BUILDING SIZE: PROPOSED WHOLESALE BUILDING - 36,000 SQ. FT.
PROPOSED OFFICE BUILDING - 180 SQ. FT.

PARKING SPACES REQUIRED: 7 (INCLUDING 1 A.D.A. ACCESSIBLE)
(WHOLESALE @ 1 PER 6000 SQ. FT. = 6 SPACES)
(36,000/ 6,000 = 6 SPACES)
(OFFICE @ 1 PER 300 SQ. FT. = 1 SPACE)
(180/ 300 = 0.6 SPACES)
TOTAL = 6 + 0.6 = 6.6 SPACES

PARKING SPACES PROVIDED: 7 (INCLUDING 1 A.D.A. ACCESSIBLE)

NOTES:

1) ALL PARKING LOT DIMENSIONS ARE TO FACE OF CURB UNLESS OTHERWISE NOTED (EXAMPLE: 15'BC) AS TO BACK OF CURB.
2) ALL PROPOSED CURBING SHALL BE 6" WIDE X 6" HIGH.
3) A.D.A. ACCESSIBLE RAMPS TO HAVE A MAXIMUM INCLINATION RATIO OF 12:1.
4) ANY COST OF ADJUSTMENTS, RELOCATION OR DAMAGE OF EXISTING UTILITIES WILL BE THE RESPONSIBILITY OF THE OWNERS/DEVELOPERS.
5) THE MINIMUM INITIAL RATING FOR THE STREETLIGHTS SHALL BE 6,800 LUMENS FOR A LOCAL STREET, 11,000 LUMENS FOR A COLLECTOR STREET, OR 20,000 LUMENS FOR AN ARTERIAL STREET. FIXTURES SHALL BE BY LSI LIGHTING MODEL CROSSOVER XRM, #SPL-XRM3-119W/LED/UE-MSV-IPC-PC-COS.
6) MODIFIED CURB REQUIRED AT ALL DRIVES.
7) ALL UTILITY WIRES, LINES, AND/OR CABLE UTILIZED BY ELECTRIC AND/OR TELECOMMUNICATIONS COMPANIES SHALL BE PLACED UNDERGROUND. EXCLUDING 12Kv AND ABOVE.
8) OUTDOOR STORAGE, TRASH COLLECTION, AND LOADING AREAS MUST BE LANDSCAPED, SO THAT THEIR FUNCTIONS ARE FULLY CONTAINED AND OUT OF VIEW OF THE ADJACENT PROPERTY AND THE PUBLIC RIGHT-OF-WAY.
9) EXTERIOR GROUND-MOUNTED OR BUILDING-MOUNTED EQUIPMENT INCLUDING, BUT NOT LIMITED TO, MECHANICAL EQUIPMENT, UTILITIES AND BANKS OF METER SHALL BE SCREENED FROM PUBLIC VIEW WITH LANDSCAPING OR WITH AN ARCHITECTURAL TREATMENT COMPATIBLE WITH THE BUILDING ARCHITECTURE.
10) ALL ROOFTOP EQUIPMENT SHALL BE SCREENED FROM PUBLIC VIEW WITH AN ARCHITECTURAL TREATMENT THAT IS COMPATIBLE WITH THE BUILDING ARCHITECTURE.
11) THE GLOBAL POSITIONING SYSTEM (GPS) AND CONVENTIONAL TERRESTRIAL SURVEYING EQUIPMENT PROVIDED THE RELATIVE POSITIONING FOR THE TOPOGRAPHIC, PLANIMETRIC AND BOUNDARY LOCATIONS SHOWN HEREON.

THE MAP PROJECTION IS REFERENCED TO THE HORIZONTAL CONTROL DATUM OF NAD83 (NORTH AMERICAN DATUM OF 1983), STATE PLANE COORDINATE SYSTEM, ARKANSAS NORTH ZONE (0301). THE BASIS OF BEARINGS FOR THIS PLAT ARE STATE PLANE GRID BEARING.

THE VERTICAL DATUM IS REFERENCED TO THE NORTH AMERICAN VERTICAL DATUM OF 1988 (NAVD88). TWO TEMPORARY BENCHMARKS UTILIZING THIS DATUM ARE SHOWN HEREON.

PARCEL NUMBERS: 815-29580-001

DEED DESCRIPTION:

PART OF THE SW 1/4 OF THE NE 1/4 OF SECTION 25, TOWNSHIP 18 NORTH, RANGE 30 WEST, BEING MORE PARTICULARLY DESCRIBED AS FOLLOWS: BEGINNING AT THE NORTHWEST CORNER OF THE SW 1/4 OF THE NE 1/4 OF SAID SECTION 25, AND RUNNING THENCE NORTH EAST FOR 660.00 FEET ALONG THE NORTH LINE OF SAID 40 ACRE TRACT; THENCE SOUTH 1020 FEET; THENCE SOUTH WEST 660.00 FEET TO THE WEST LINE OF SAID 40 ACRE TRACT; THENCE NORTH 1020 FEET TO THE POINT OF BEGINNING, CONTAINING 15.45 ACRES, MORE OR LESS. SUBJECT TO EASEMENTS AND RIGHTS-OF-WAY AND RESTRICTIVE COVENANTS, IF ANY.

PARCEL NUMBERS: 815-29582-000

DEED DESCRIPTION:

PART OF THE SOUTHWEST QUARTER (SW 1/4) OF THE NORTHEAST QUARTER (NE 1/4) OF SECTION TWENTY-FIVE (25), TOWNSHIP EIGHTEEN (18) NORTH, RANGE THIRTY (30) WEST, BEING MORE PARTICULARLY DESCRIBED AS FOLLOWS, TO-WIT: BEGINNING AT THE SOUTHWEST CORNER OF SAID FORTY ACRES TRACT AND RUNNING THENCE EAST 145 FEET; THENCE NORTH 300 FEET; THENCE WEST 145 FEET; THENCE SOUTH 300 FEET TO THE POINT OF BEGINNING. SUBJECT TO THE RIGHT-OF-WAY OF RANDALL ROAD ALONG THE SOUTH SIDE AND ANY OTHER EASEMENTS AND RIGHT-OF-WAY OF RECORDS, IN ANY.

INDEX OF TREES

TREE SYMBOL	COMMON NAME	BOTANICAL NAME	TOTAL # TREES	SIZE
	RED BUD	Cercis canadensis	2	2" Cal B & B
	LOBLOLLY PINE	Pinus taeda	14	2" Cal B & B
	SHUMARD OAK	Quercus shumard	7	2" Cal B & B

SITE SPECIFIC NOTES:

- TREES AND SHRUBS SHALL BE SPACED AS SHOWN ON PLANS. SIZES OF TREES AND SHRUBS AT TIME OF PLANTING ARE SHOWN ON INDEX ON THIS PAGE.
- ALL TREES AND SHRUBS SHALL BE MULCHED WITH A MINIMUM OF 3" THICK, NON FLOATABLE, PINE BARK MULCH.
- TREES REQUIRING STAKING SHALL BE INSTALLED PER THE DETAIL PROVIDED.
- ALL DISTURBED AREAS NOT TO BE PAVED SHALL BE SEEDED OR SODDED AS REQUIRED. MAINTENANCE SHALL BE PROVIDED FOR BOTH SEED AND SOD UNTIL 100% COVERAGE IS COMPLETE OR THE SOD IS ESTABLISHED.
- ALL LANDSCAPE PLANTINGS SHALL BE GUARANTEED FOR 2 YEARS OR SHALL BE REPLACED AT OWNERS EXPENSE.
- STEEL EDGING SHALL BE PROVIDED AT ALL AREAS SHOWN ON PLANS

FLOOD PLAIN ZONING:

A PART OF PARCEL # 815-29580-001 PROPERTY IS WITHIN ZONE A OF THE 100 YEAR FLOOD ZONE AS SHOWN ON THE F.I.R.M. MAP #05143C0060 F,WASHINGTON COUNTY, ARKANSAS & INCORPORATED AREAS. EFFECTIVE DATE: MAY 16, 2008.

L16-01

ESI
ENGINEERING SERVICES INC.
1207 SOUTH OLD MISSOURI RD.
SPRINGDALE, ARKANSAS 72764

OVERALL SITE PLAN
STAR MECHANICAL SUPPLY INC
SPRINGDALE, ARKANSAS

REVISION	DATE	DESCRIPTION

SCALE: 1"=60'
DATE: DEC, 2015
ENGINEER: TJA
DRAWN BY: XXX
W.O. #: 15965

1

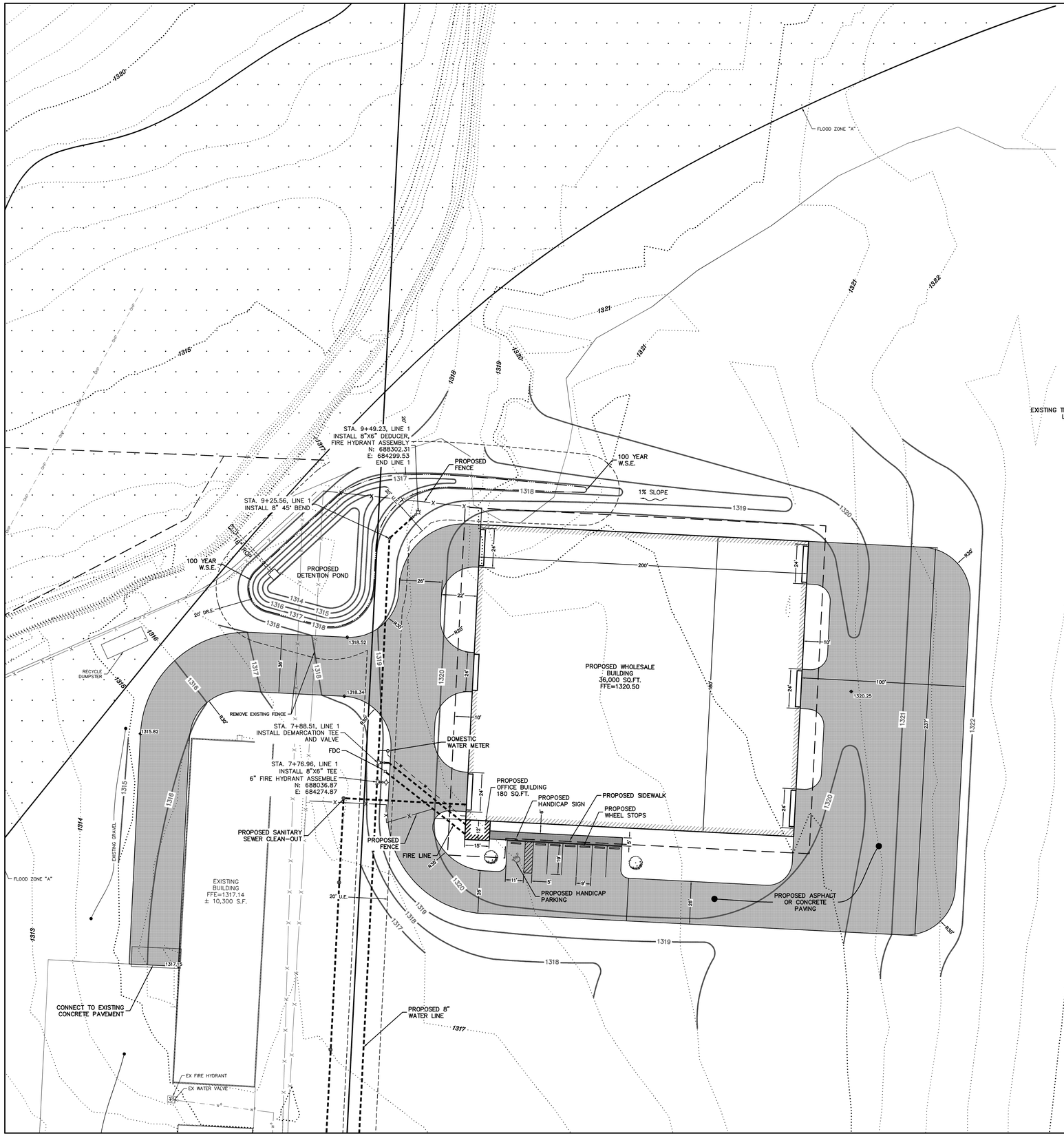

LEGEND

●	IRON PIN FOUND
△	CONTROL POINT
	PROPERTY LINE
	EX. CURB & GUTTER
1300	EX. CONTOUR
1300	EX. CONTOUR
—X—X—X—X—	EX. FENCE LINE
—UGP—UGP—UGP—	EX. UNDERGROUND POWER LINE
—OHP—OHP—OHP—	EX. OVERHEAD POWER LINE
—OHP/C—OHP/C—OHP/C—	EX. OVERHEAD POWER & CABLE LINE
—SS15—SS15—SS15—	EX. 15" SEWER LINE
—G—G—G—G—	EX. GAS LINE
—UGT—UGT—UGT—	EX. UNDERGROUND TELEPHONE LINE
	EX. STORM DRAIN LINE
—CTV—CTV—CTV—	EX. CABLE LINE
—W6—W6—W6—W6—	EX. 6" WATER LINE
—F.O.—F.O.—F.O.—	EX. FIBER OPTIC LINE
	EX. WATER METER
	EX. FIRE HYDRANT
	EX. SEWER MANHOLE
	EX. POWER POLE
	EX. WATER VALVE
	EX. GAS METER
	EX. TELEPHONE PEDESTAL
	EX. POWER JUNCTION BOX
	EX. LIGHT POLE
	EX. SIGN
1348.64	PROPOSED SPOT ELEVATION

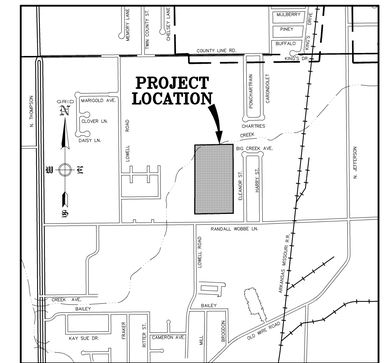

VICINITY MAP
N.T.S.

DEVELOPER: STAR MECHANICAL SUPPLY INC.
122 RANDALL WOBBE LN.
SPRINGDALE, AR 72764

ENGINEER: ENGINEERING SERVICES, INC.
1207 S. OLD MISSOURI RD.
P.O. BOX 282
SPRINGDALE, AR 72765-0282

ZONING: I-1

GROSS AREA: PARCEL # 815-29580-001
15.45 ACRES

PARCEL # 815-29582-000
1.00 ACRES

PROPOSED BUILDING SIZE: PROPOSED WHOLESALE BUILDING – 36,000 SQ. FT.
PROPOSED OFFICE BUILDING – 180 SQ. FT.

PARKING SPACES REQUIRED: 7 (INCLUDING 1 A.D.A. ACCESSIBLE)
(WHOLESALE @ 1 PER 6000 SQ. FT. = 6 SPACES)
(36,000/ 6,000 = 6 SPACES)
(OFFICE @ 1 PER 300 SQ. FT. = 1 SPACE)
(180/ 300 = 0.6 SPACES)
TOTAL = 6 + 0.6 = 6.6 SPACES

PARKING SPACES PROVIDED: 7 (INCLUDING 1 A.D.A. ACCESSIBLE)

NOTES:

1) ALL PARKING LOT DIMENSIONS ARE TO FACE OF CURB UNLESS OTHERWISE NOTED (EXAMPLE: 15'BC) AS TO BACK OF CURB.
2) ALL PROPOSED CURBING SHALL BE 6" WIDE X 6" HIGH.
3) A.D.A. ACCESSIBLE RAMPS TO HAVE A MAXIMUM INCLINATION RATIO OF 12:1.
4) ANY COST OF ADJUSTMENTS, RELOCATION OR DAMAGE OF EXISTING UTILITIES WILL BE THE RESPONSIBILITY OF THE OWNERS/DEVELOPERS.
5) THE MINIMUM INITIAL RATING FOR THE STREETLIGHTS SHALL BE 6,800 LUMENS FOR A LOCAL STREET, 11,000 LUMENS FOR A COLLECTOR STREET, OR 20,000 LUMENS FOR AN ARTERIAL STREET. FIXTURES SHALL BE BY LSI LIGHTING MODEL CROSSOVER XRM, #SPL-XRM3-119W/LED/UE-MSV-IPC-PC-COS.
6) MODIFIED CURB REQUIRED AT ALL DRIVES.
7) ALL UTILITY WIRES, LINES, AND/OR CABLE UTILIZED BY ELECTRIC AND/OR TELECOMMUNICATIONS COMPANIES SHALL BE PLACED UNDERGROUND. EXCLUDING 12Kv AND ABOVE.
8) OUTDOOR STORAGE, TRASH COLLECTION, AND LOADING AREAS MUST BE LANDSCAPED, SO THAT THEIR FUNCTIONS ARE FULLY CONTAINED AND OUT OF VIEW OF THE ADJACENT PROPERTY AND THE PUBLIC RIGHT-OF-WAY.
9) EXTERIOR GROUND-MOUNTED OR BUILDING-MOUNTED EQUIPMENT INCLUDING, BUT NOT LIMITED TO, MECHANICAL EQUIPMENT, UTILITIES AND BANKS OF METER SHALL BE SCREENED FROM PUBLIC VIEW WITH LANDSCAPING OR WITH AN ARCHITECTURAL TREATMENT COMPATIBLE WITH THE BUILDING ARCHITECTURE.
10) ALL ROOFTOP EQUIPMENT SHALL BE SCREENED FROM PUBLIC VIEW WITH AN ARCHITECTURAL TREATMENT THAT IS COMPATIBLE WITH THE BUILDING ARCHITECTURE.
11) THE GLOBAL POSITIONING SYSTEM (GPS) AND CONVENTIONAL TERRESTRIAL SURVEYING EQUIPMENT PROVIDED THE RELATIVE POSITIONING FOR THE TOPOGRAPHIC, PLANIMETRIC AND BOUNDARY LOCATIONS SHOWN HEREON.

THE MAP PROJECTION IS REFERENCED TO THE HORIZONTAL CONTROL DATUM OF NAD83 (NORTH AMERICAN DATUM OF 1983), STATE PLANE COORDINATE SYSTEM, ARKANSAS NORTH ZONE (0301). THE BASIS OF BEARINGS FOR THIS PLAT ARE STATE PLANE GRID BEARING.

THE VERTICAL DATUM IS REFERENCED TO THE NORTH AMERICAN VERTICAL DATUM OF 1988 (NAVD88). TWO TEMPORARY BENCHMARKS UTILIZING THIS DATUM ARE SHOWN HEREON.

PARCEL NUMBERS: 815-29580-001

DEED DESCRIPTION:

PART OF THE SW 1/4 OF THE NE 1/4 OF SECTION 25, TOWNSHIP 18 NORTH, RANGE 30 WEST, BEING MORE PARTICULARLY DESCRIBED AS FOLLOWS: BEGINNING AT THE NORTHWEST CORNER OF THE SW 1/4 OF THE NE 1/4 OF SAID SECTION 25, AND RUNNING THENCE NORTH EAST FOR 660.00 FEET ALONG THE NORTH LINE OF SAID 40 ACRE TRACT; THENCE SOUTH 1020 FEET; THENCE SOUTH WEST 660.00 FEET TO THE WEST LINE OF SAID 40 ACRE TRACT; THENCE NORTH 1020 FEET TO THE POINT OF BEGINNING, CONTAINING 15.45 ACRES, MORE OR LESS. SUBJECT TO EASEMENTS AND RIGHTS-OF-WAY AND RESTRICTIVE COVENANTS, IF ANY.

PARCEL NUMBERS: 815-29582-000

DEED DESCRIPTION:

PART OF THE SOUTHWEST QUARTER (SW 1/4) OF THE NORTHEAST QUARTER (NE 1/4) OF SECTION TWENTY-FIVE (25), TOWNSHIP EIGHTEEN (18) NORTH, RANGE THIRTY (30) WEST, BEING MORE PARTICULARLY DESCRIBED AS FOLLOWS, TO-WIT: BEGINNING AT THE SOUTHWEST CORNER OF SAID FORTY ACRES TRACT AND RUNNING THENCE EAST 145 FEET; THENCE NORTH 300 FEET; THENCE WEST 145 FEET; THENCE SOUTH 300 FEET TO THE POINT OF BEGINNING. SUBJECT TO THE RIGHT-OF-WAY OF RANDALL ROAD ALONG THE SOUTH SIDE AND ANY OTHER EASEMENTS AND RIGHT-OF-WAY OF RECORDS, IN ANY.

FLOOD PLAIN ZONING:

A PART OF PARCEL # 815-29580-001 PROPERTY IS WITHIN ZONE A OF THE 100 YEAR FLOOD ZONE AS SHOWN ON THE F.I.R.M. MAP #05143C0060 F,WASHINGTON COUNTY, ARKANSAS & INCORPORATED AREAS. EFFECTIVE DATE: MAY 16, 2008.

L16-01

ENGINEERING SERVICES INC.
1207 S. OLD MISSOURI RD.
SPRINGDALE, ARKANSAS 72764

LARGE SCALE DEVELOPMENT
STAR MECHANICAL SUPPLY INC
SPRINGDALE, ARKANSAS

REVISION	DATE	DESCRIPTION

SCALE: 1"=30'

DATE: DEC, 2015

ENGINEER: TJA
DRAWN BY: DLB

W.O. #: 15965

© COPYRIGHT 2015, ENGINEERING SERVICES, INC. 11-20-15 03:47 PM
Z:\LSD\15965 STAR MECHANICAL SUPPLY INC\FINAL\15965 LSD.DWG

2

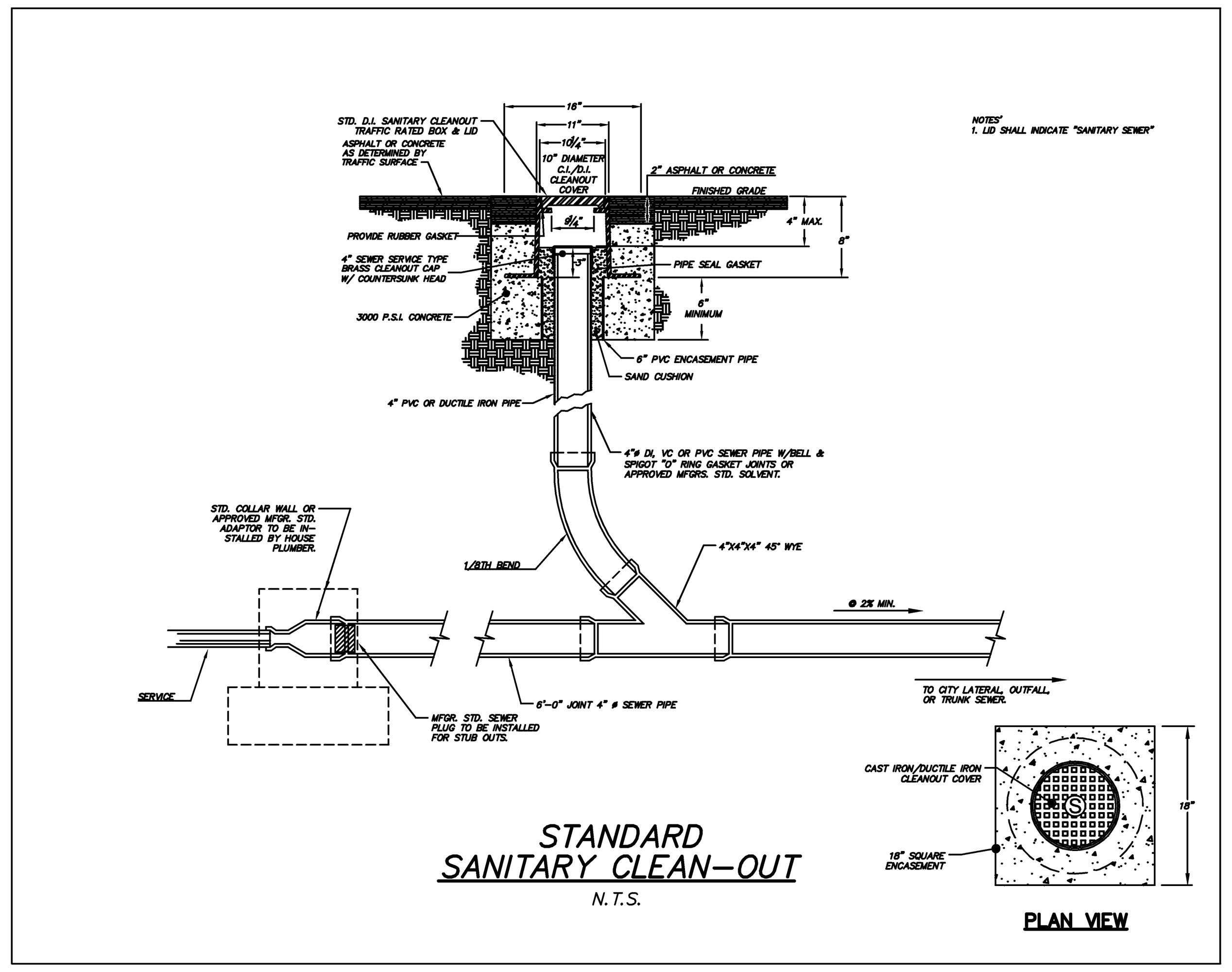

STANDARD SANITARY CLEAN-OUT

N.T.S.

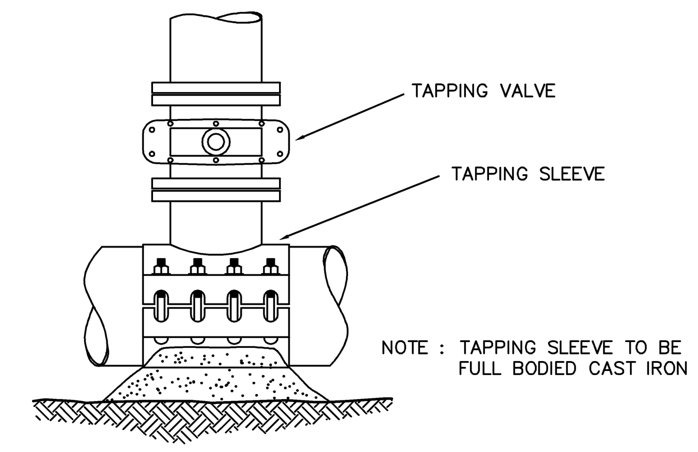

TYPICAL DETAIL OF TAPPING VALVE AND SLEEVE

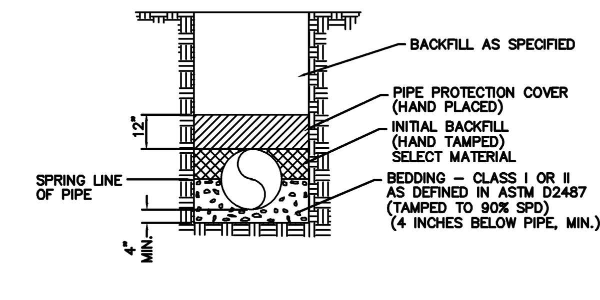

PVC SEWER PIPE BEDDING DETAIL

N.T.S.

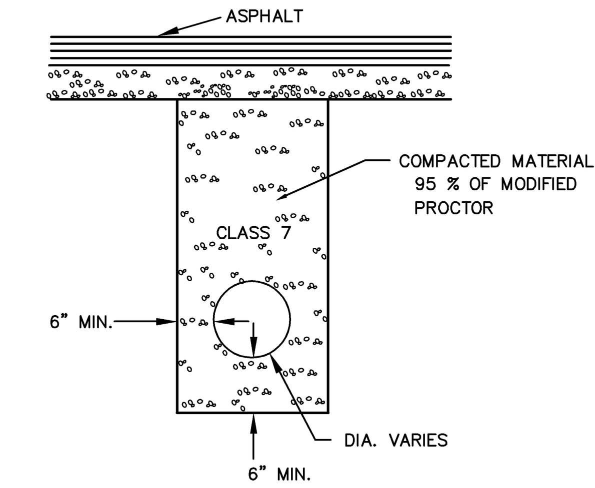

STORM SEWER PIPE BEDDING IN ROAD

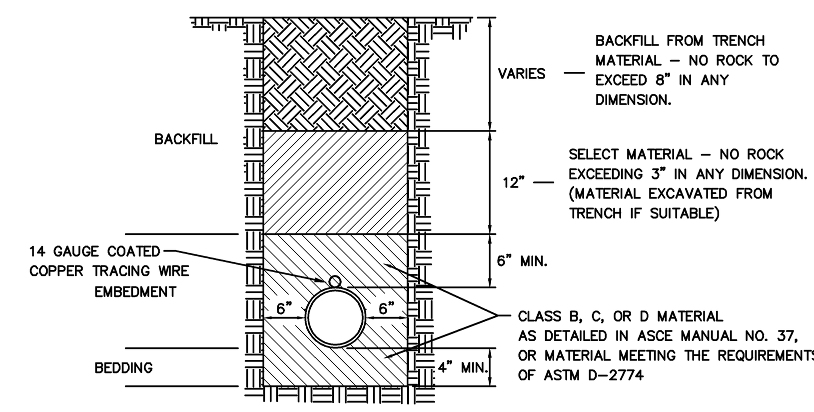

TYPICAL PVC BEDDING DETAIL

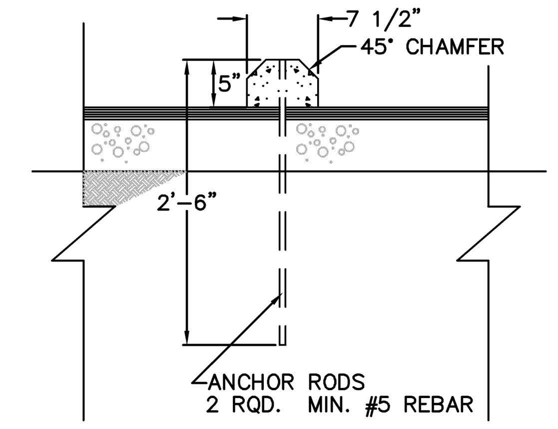

WHEEL STOP DETAIL

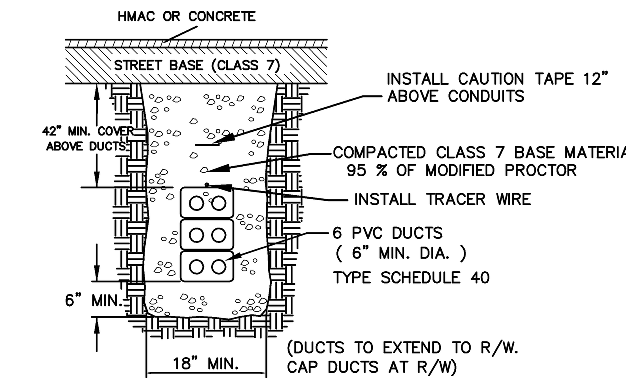

6-4" UTILITY DUCTS

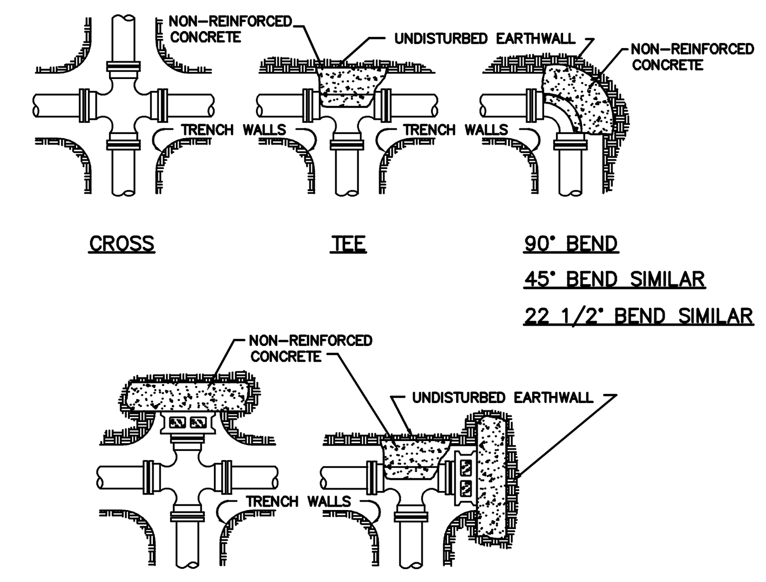

NOTES:

1. ALL FITTINGS SHALL BE MECHANICAL JOINTS, UNLESS OTHERWISE SPECIFIED.
2. DO NOT COVER BELLS OR FLANGES WITH CONCRETE.
3. WRAP ALL FITTINGS WITH POLYETHYLENE AS SPECIFIED.
4. BACK ALL TEES ACCORDING TO SIZE OF BRANCH.
5. BACKING FOR FUTURE LINE EXTENSIONS SHALL BE SUCH THAT REMOVAL OF BACKING IS POSSIBLE IN THE FUTURE.
6. ALL BENDS WHERE FITTINGS ARE USED, BOTH HORIZONTAL AND VERTICAL, SHALL BE BACKED.
7. THE REACTION BACKING TABLE IS BASED ON 150 PSI AND A SOIL BEARING PRESSURE OF 2,500 LB/SQ FT. ADDITIONAL BACKING MAY BE REQUIRED IN SOME AREAS AS DIRECTED BY THE ENGINEER.

REACTION BACKING TABLE

SIZE	REQUIRED SQ. FT. OF UNDISTURBED EARTHWALL FOR REACTION BACKING — TYPE OF FITTINGS			
	TEE	90°	45°	22 1/2°
2"	1	1	1	1
3"	1	1	1	1
4"	1	2	1	1
6"	3	3	2	1
8"	4	4	3	2
10"	7	7	4	2
12"	10	10	5	3
14"	13	13	7	4
16"	17	17	9	5
18"	21	21	12	6
20"	26	26	14	7
24"	38	38	20	10
30"	59	59	32	16
36"	85	85	46	23

REACTION BACKING

N.T.S.

NOTE:
ALL HYDRANTS TO BE SET PLUMB W/PUMPER NOZZLE FACING STREET OR AS DIRECTED BY S.W.U. ENGINEER.

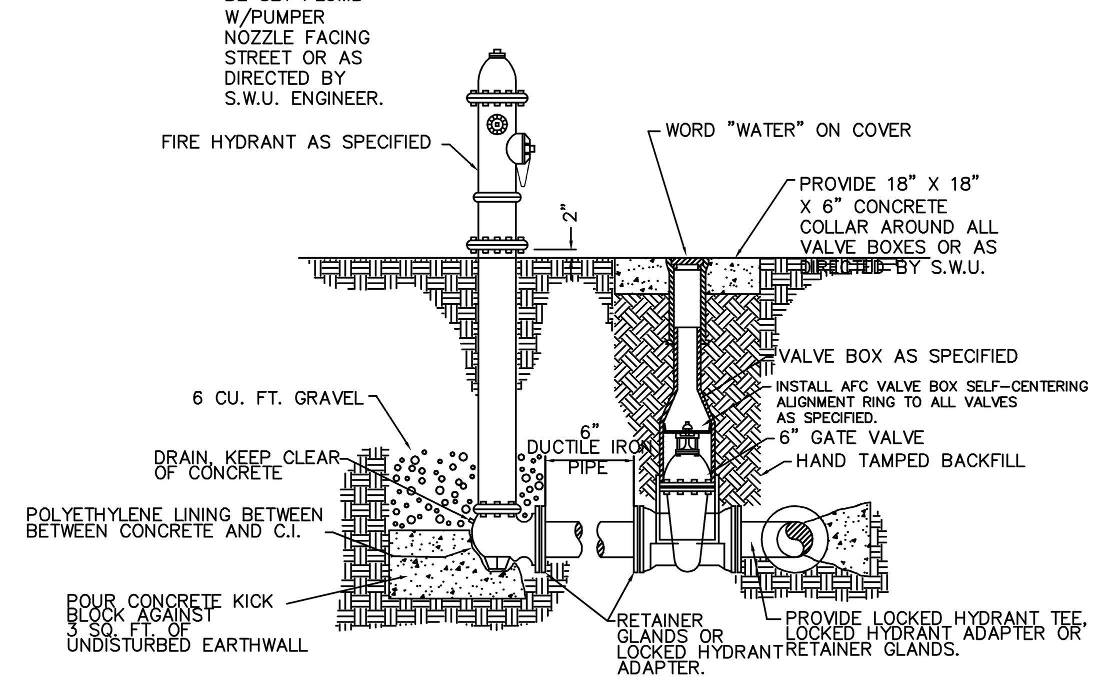

FIRE HYDRANT & GATE VALVE

N.T.S.

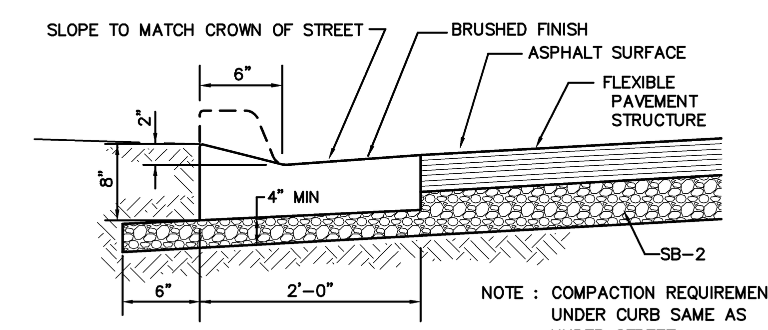

MODIFIED CONCRETE CURB & GUTTER

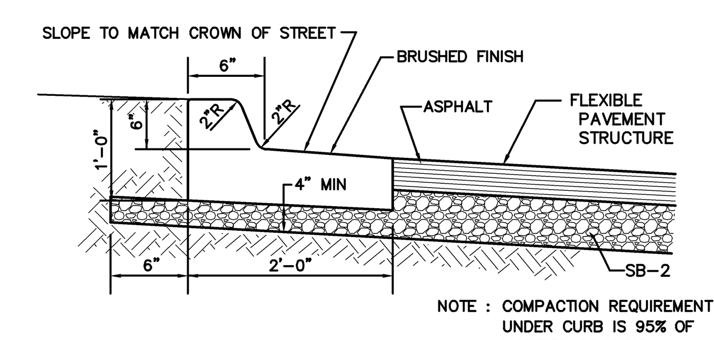

STANDARD 6" CONCRETE SPILL CURB & GUTTER

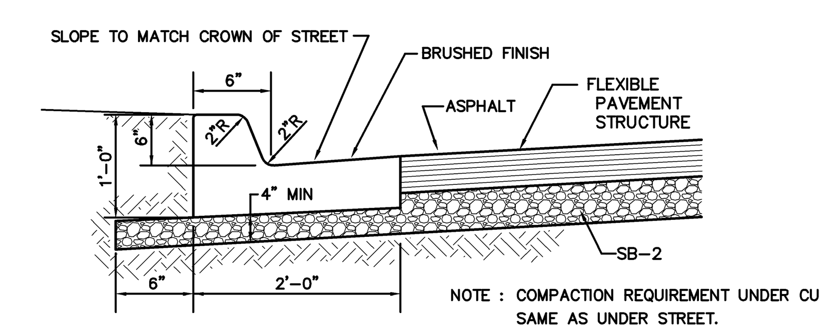

STANDARD 6" CONCRETE CURB & GUTTER

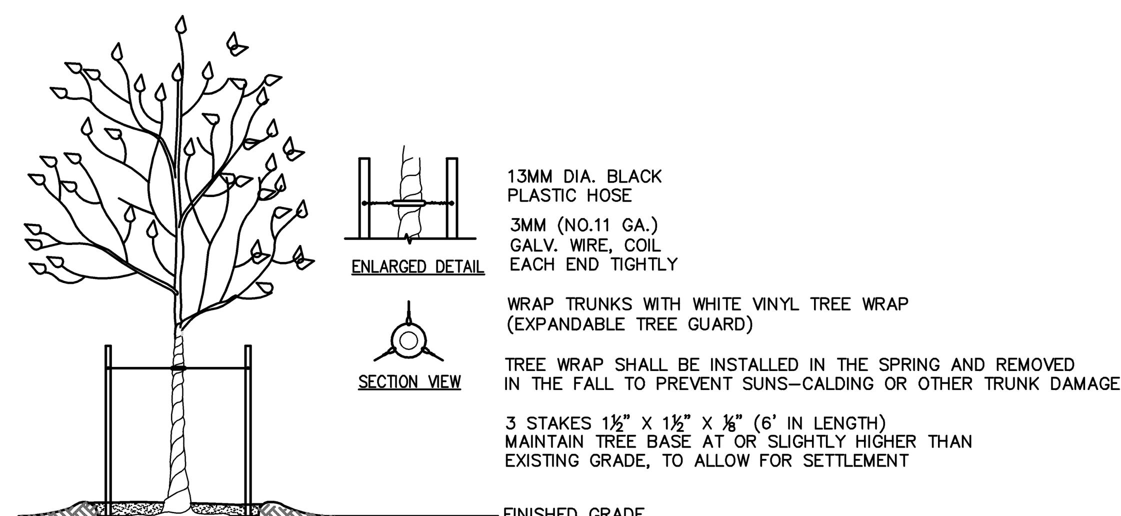

SPECIFICATIONS:

DO NOT DAMAGE MAIN ROOTS OR DESTROY ROOT BALL WHEN INSTALLING TREE STAKE.
REMOVE TREE RINGS AND STAKES WITHIN ONE YEAR AFTER INSTALLATION.
TREE STAKING SHALL NOT BE ALLOWED AT LOCATIONS WHERE PEDESTRIAN SAFETY BY PROXIMITY IS A CONSIDERATION.
REFER TO THE TREE PLANTING DETAIL FOR ADDITIONAL INSTALLATION REQUIREMENTS

TREE STAKING AND WRAPPING DETAIL
NOT TO SCALE

NOTES:
1. TREES SHALL BE 2" CALIPER MINIMUM.
2. THE HOLE FOR THE TREE SHALL BE EXCAVATED 2-3 TIMES THE SIZE OF THE ROOT BALL.
3. STAKE ONLY IF NECESSARY AND AS DIRECTED BY THE PROJECT MANAGER.
4. REMOVE ANY TWINE, ROPE, FLAGGING, WRAPPING, OR GUARDS FROM TREE.
5. PRUNE ONLY DEAD OR BROKEN BRANCHES OR DOUBLE LEADERS AT TIME OF PLANTING.
6. ROOTBALL – ROOT COLLAR SHALL BE VISIBLE. REMOVE EXCESS SOIL FROM TOP OF BALL IF NEEDED. SET TOP OF BALL 1" TO 2" ABOVE FINISHED GRADE TO ALLOW FOR SETTLING. AFTER SETTING BALL IN PLANTING HOLE, CUT AWAY OR REMOVE THE ENTIRE WIRE BASKET. CUT OR REMOVE ALL ROPES OR TWINE FROM BALL. CUT AWAY OR REMOVE BURLAP. IF ROOTBALL BEGINS FALLING APART DURING INSTALLATION OR WHILE REMOVING THE WIRE BASKET, CUT AWAY ONLY HALF OF THE BURLAP.

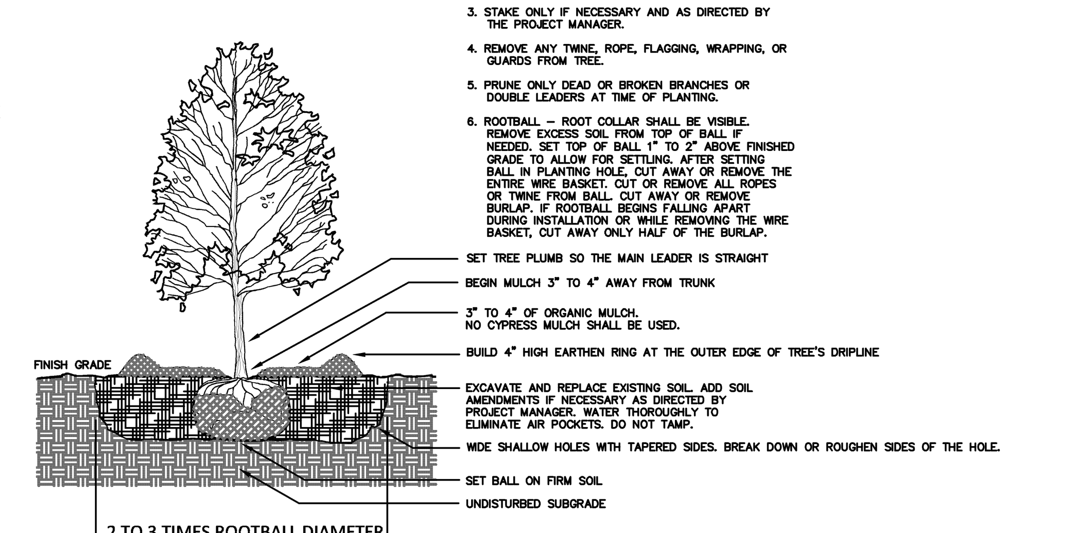

TREE PLANTING DETAIL
NOT TO SCALE

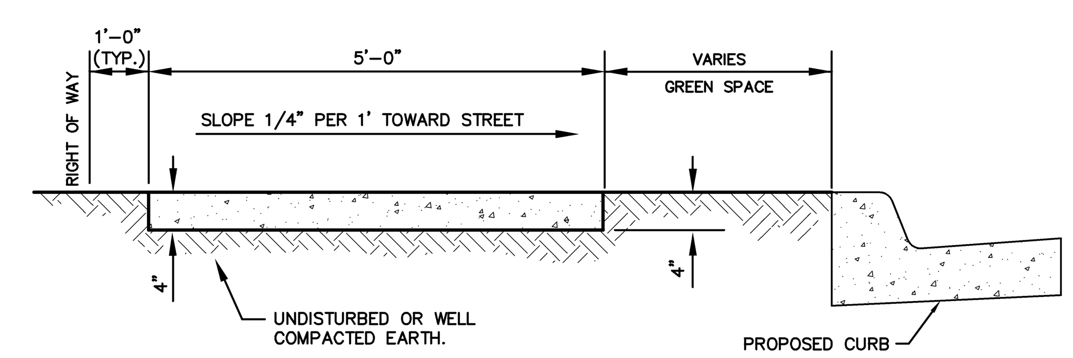

NOTE: PROVIDE EXPANSION JOINTS AT EACH STRUCTURE, CURB, AND A MINIMUM INTERVAL OF 200 FOOT.

NOTE: TRANSVERSE JOINTS BETWEEN EXPANSION JOINTS TO BE SCORED AT 5 FOOT INTERVALS.

SIDEWALK DETAIL

L16-01

ENGINEERING SERVICES INC.
1207 SOUTH OLD MISSOURI RD.
SPRINGDALE, ARKANSAS 72764

TYPICAL DETAILS
STAR MECHANICAL SUPPLY INC
SPRINGDALE, ARKANSAS

REVISION	DATE	DESCRIPTION

@ COPYRIGHT 2015, ENGINEERING SERVICES, INC. 11-06-15, 04:50 PM

Z:\LSD\15965 STAR MECHANICAL SUPPLY INC\FINAL\15965 TYPICAL DETAILS.DWG

SCALE: N.T.S.
DATE: DEC, 2015
ENGINEER: TJA
DRAWN BY: DLB
W.O. #: 15965

3

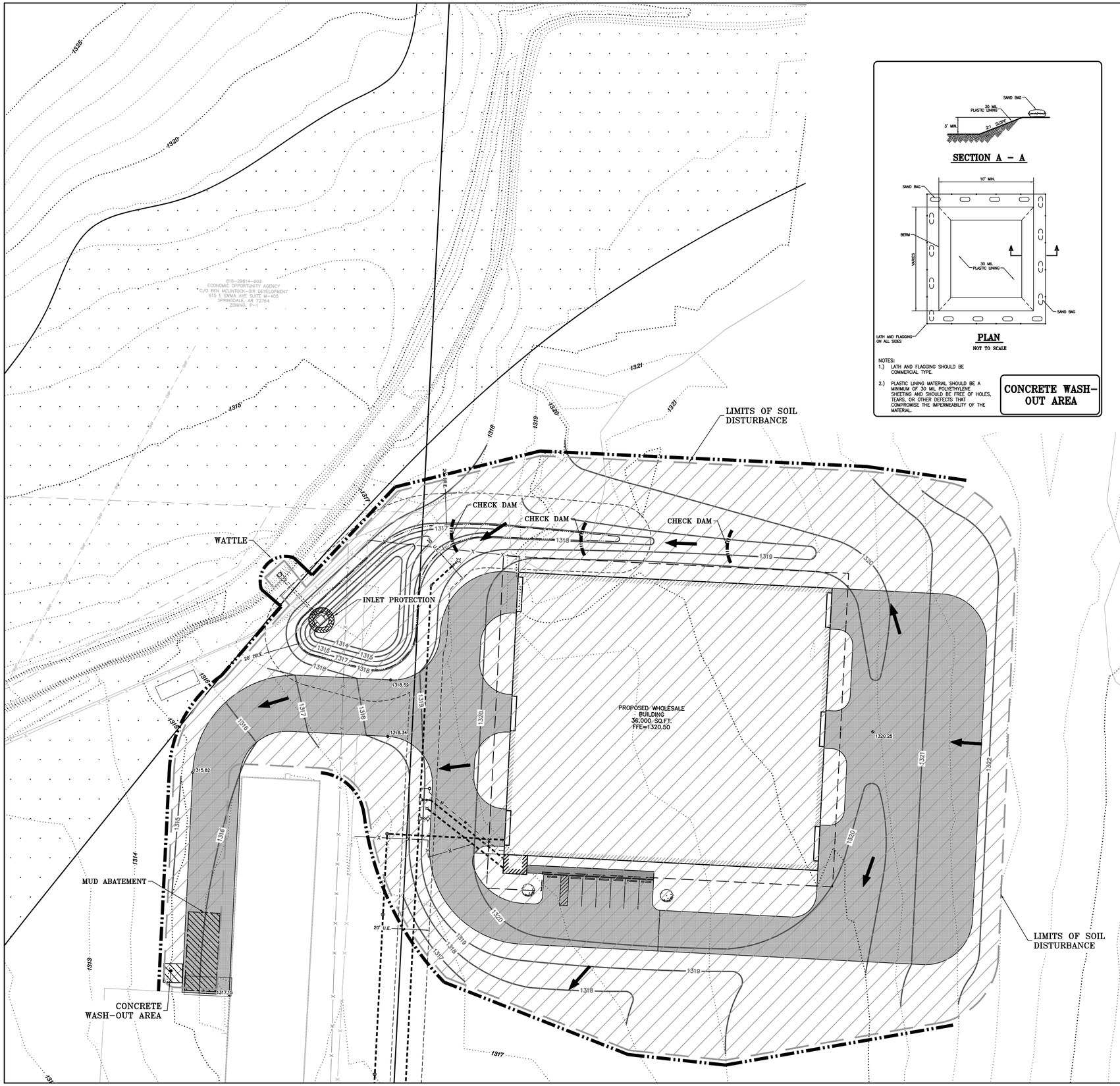

SECTION A – A

PLAN

NOT TO SCALE

NOTES:
1.) LATH AND FLAGGING SHOULD BE COMMERCIAL TYPE.
2.) PLASTIC LINING MATERIAL SHOULD BE A MINIMUM OF 30 MIL POLYETHYLENE SHEETING AND SHOULD BE FREE OF HOLES, TEARS, OR OTHER DEFECTS THAT COMPROMISE THE IMPERMEABILITY OF THE MATERIAL.

CONCRETE WASH-OUT AREA

NOTE:

NO CHANGE MAY BE MADE TO THESE APPROVED PLANS WITHOUT PRIOR WRITTEN APPROVAL BY THE CITY OF SPRINGDALE.

WITHIN 40 DAYS OF PLACEMENT OF CURBS, THEY SHALL BE BACKFILLED, FINE GRADED WITH A MINIMUM OF 4-INCHES OF TOPSOIL, AND HYDROMULCHED OR SODDED WITH PERMANENT GRASSES.

ALL DISTURBED AREAS, THAT ARE NOT PAVED, SHALL BE TOPSOILED, SEEDED AND STRAWED UNTIL GRASS IS ESTABLISHED.

CONSTRUCTION SEQUENCE:

1.) INSTALL EROSION CONTROL.
2.) STRIP EXISTING TOP SOIL.
3.) PREPARE SUB-GRADE AND BASE MATERIAL.
4.) POUR CONCRETE AND ASPHALT.
5.) FINAL GRADING AND ESTABLISH VEGETATION.

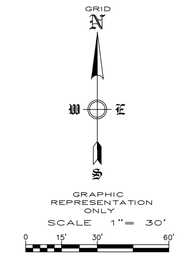

NOTES:

1) NATURAL VEGETATION SHALL BE RETAINED WHEREVER POSSIBLE.

2) SEED AND MULCH SHALL BE PLACED (BY OWNER) IN ALL AREAS WHERE VEGETATION IS DISTURBED.

3) STRAW AND WOOD CHIPS SHALL BE PLACED TO PROVIDE TEMPORARY PROTECTION WHILE FINAL GRADING IS BEING COMPLETED.

4) PLACE FILTER FABRIC ON ALL CURB INLETS.

*WATTLES & CHECK DAMS ARE USED AS ENERGY DISSIPATION DEVICES

*WATTLES & CHECK DAMS ARE USED TO CONTROL POLLUTANTS DURING STORM WATER DISCHARGE

*WATTLES & CHECK DAMS MUST BE MAINTAINED UNTIL SITE IS PERMANENTLY STABILIZED

LEGEND

- PROPOSED FLOWLINE DIRECTION
- WATTLE
- 1390 EXISTING CONTOURS
- 1388 PROPOSED CONTOURS
- AREA OF SOIL DISTURBANCE
- INLET PROTECTION
- CHECK DAM

TOTAL DISTURBED AREA: 3.61 ACRES

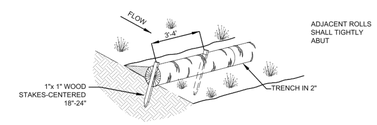

INSTALLATION NOTES:
1. WATTLES SHALL CONSIST OF STRAW, COMPOST, EXCELSIOR, OR COCONUT FIBER.
2. NOT FOR USE IN CONCENTRATED FLOW AREAS.
3. THE WATTLES SHALL BE TRENCHED INTO THE GROUND A MINIMUM OF TWO (2) INCHES.
4. WATTLES SHALL BE INSTALLED PER MANUFACTURERS SPECIFICATIONS.
5. ON SLOPES, WATTLES SHOULD BE INSTALLED ON CONTOUR WITH A SLIGHT UPWARD CURVE AT THE END OF THE ROW IN ORDER TO CREATE PONDING.
6. RUNNING LENGTHS OF WATTLES SHOULD BE ABUTTED FIRMLY TO ENSURE NO LEAKAGE AT THE ABUTMENTS.
7. WHEN INSTALLING RUNNING LENGTHS OF WATTLES, BUTT THE SECOND WATTLE TIGHTLY AGAINST THE FIRST. DO NOT OVERLAP THE ENDS. STAKE THE WATTLES AT EACH END AND FOUR FOOT ON CENTER.
8. STAKES SHOULD BE DRIVEN THROUGH THE MIDDLE OF THE WATTLE, LEAVING 2 - 3 INCHES OF THE STAKE PROTRUDING ABOVE THE WATTLE. WHEN INSTALLING WATTLES ON SLOPES, DRIVE THE STAKES PERPENDICULAR TO THE SLOPE.
9. DRIVE THE FIRST END STAKE OF THE SECOND WATTLE AT AN ANGLE TOWARD THE FIRST WATTLE IN ORDER TO HELP ABUT THEM TIGHTLY TOGETHER.
10. STAKING: THE CITY RECOMMENDS USING WOOD STAKES TO SECURE THE WATTLES. 1/2" TO 5/8" REBAR IS ALSO ACCEPTABLE WITH A SAFETY CAP. BE SURE TO USE A STAKE THAT IS LONG ENOUGH TO PROTRUDE SEVERAL INCHES ABOVE THE WATTLE.
11. THE CONTRACTOR SHALL INSPECT WATTLES EVERY TWO WEEKS AND AFTER ANY SIGNIFICANT STORM EVENT AND MAKE REPAIRS OR REMOVE SEDIMENT ACCUMULATED BEHIND WATTLE AS NECESSARY.
12. SEDIMENT ACCUMULATED BEHIND WATTLE SHALL BE REMOVED WHEN THE SEDIMENT HAS ACCUMULATED TO ONE HALF THE DIAMETER OF THE WATTLE.
13. WATTLES SHALL REMAIN IN PLACE UNTIL THE UPSTREAM DISTURBED AREA IS STABILIZED AND IS ACCEPTED BY THE CITY.

WATTLE DETAIL
N.T.S.

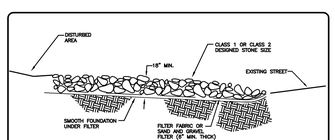

TYPICAL SECTION

NOTE:
1. MINIMUM THICKNESS SHALL BE 18", THE STONE DIAMETER, NEVER LESS THAN 6".
2. MINIMUM LENGTH SHALL BE 50'

MUD ABATEMENT ENTRANCE

L16-01

ENGINEERING SERVICES INC.
1207 SOUTH OLD MISSOURI RD.
SPRINGDALE, ARKANSAS 72764

STORM WATER POLLUTION PREVENTION PLAN
STAR MECHANICAL SUPPLY INC
SPRINGDALE, ARKANSAS

REVISION	DATE	DESCRIPTION

SCALE: 1"=30'

DATE: DEC, 2015

ENGINEER: TJA
DRAWN BY: DLB

W.O. #: 15965

© COPYRIGHT 2015, ENGINEERING SERVICES, INC. 11-09-15, 09:11 AM
Z:\2015\15965 STAR MECHANICAL SUPPLY INC\PDWG\15965 S SPRYPP.DWG

4

Staff Use Only

☐ Fee Paid ($75) ☐ Cash ☐ Check ☐ CC
☐ Warranty Deed
☐ Authorization of Representation
☐ Drawing/Photo or Other Exhibit

File # B 1601

☐ *A "Notice of Violation" was issued to the Applicant/Property Owner by Code Enforcement.*

APPLICATION FOR VARIANCE

ZONING BOARD OF ADJUSTMENT
SPRINGDALE PLANNING COMMISSION
CITY OF SPRINGDALE, ARKANSAS

Applicant's Name: Darryl Hill

Applicant's Mailing Address:

P.O. Box 519
Street Address or P.O. Box

479-236-[redacted]6201
Telephone Number

Tontitown AR 72770
City, State & Zip Code

Property Owner's Name
(If different from Applicant): _____

Property Owner's Mailing Address:
(If different from Applicant):

_____
Street Address or P.O. Box

_____
Telephone Number

_____
City, State & Zip Code

Address of Variance Request: 7943 W. Gibbs Road

Zoning District: A-1

The following information should be attached to this application:

1. $75.00 Fee
2. Warranty Deed
3. Authorization of Representation *(If the Property Owner will not be present at the meeting.)*
4. Drawings, Photos, or Other Exhibit
5. The applicant shall be responsible for providing the name and address of all adjacent property owners. The notice to all adjacent property owners must be

sent by certified mail, return receipt requested at least ten (10) days prior to the Planning Commission meeting. Evidence in the form of a signed Affidavit, that notice has been given to all adjacent property owners by certified mail, return receipt requested, will be submitted. Notification should be sent after the Planning Department has accepted the application and the date of the public hearing has been confirmed.

6. The required Affidavit and supporting exhibits (mailing receipts, list of property owners of record and copy of notice) shall be filed with the Planning Office no later than seven (7) days prior to the meeting date.

SETBACK VARIANCES:

☐ *Not Applicable*

Please complete the following to apply for a setback variance. Required setbacks vary by zoning district, please ***contact staff*** *to determine the required setback.*

Required: Front: 35' Side: 20' Back: 35'
(This is the minimum required by the Springdale Code of Ordinance)

Requested: Front: _____ Side: 6' Back: _____
(if granted what the setback would be.)

Variance: Front: _____ Side: 14' Back: _____
(The difference between the "Required" and the "Requested" setback)

VARIANCES OTHER THAN SETBACK:

☒ *Not Applicable*

Use the space below to describe the variance request. If possible please reference the applicable section of the Springdale Code of Ordinance. Attach a separate sheet if needed.

_____

_____

_____

_____

The Zoning Board of Adjustment, after a hearing, may vary the application of certain provisions of the Springdale Code of Ordinance. The variance can be granted when, in the Board's opinion, the specific case will not be contrary to public interest, where, owing to special conditions, a literal enforcement of the provisions of the ordinance would result in unnecessary hardship, and also finds ***ALL of the following:***

The Applicant must respond to items 1, 2, and 3.

1. That special conditions and circumstances exist which are particular to the land, structure, or building involved and which are not applicable to other lands, structures, or buildings in the same district. **Use the space below to describe to the Board of Adjustment the special conditions and circumstances that exist on the property (attach a separate sheet if necessary):**

   Adjacent Land is an open Field
   There ~~are~~ are no buildings or Structures
   within 300 FT

2. That the literal interpretation of the provision of the Springdale Code of Ordinance would deprive the applicant of rights commonly enjoyed by other properties in the same district. **Use the space below to explain the rights of which the applicant is being deprived (attach a separate sheet if necessary):**

   The structures on the property
   were built prior to annexation to
   Springdale - current Location would have
   Acceptable when in County

3. That the special conditions and circumstances do not result from the actions of the applicant. **Use the space below to explain how the special conditions or circumstances occurred (attach a separate sheet if necessary):**

   The current Location provides easy Access
   to the utilities necessary to operate
   a hydroponic ~~Farm~~ Farm

4. That granting the variance <u>will not</u> confer on the applicant any special privilege that is denied by this ordinance to other lands, structures, or buildings in the same district.

5. That the variance granted is the minimum variance that will make possible that reasonable use of the land, building or structure.

6. That the granting of the variance will be in harmony with the general purpose and intent of this ordinance, and will not be injurious to the neighborhood, or otherwise detrimental to the public welfare.

VERIFICATION

I/We, the undersigned, herewith state on solemn oath that we have read the above and foregoing application for rezoning and that all the facts, statements, and allegations therein contained are true and correct to the best of my knowledge and belief and that complete disclosure of all material facts have been made.

Applicant Signature*

Property Owner Signature*
(If different from Applicant)

Applicant Signature*

Property Owner Signature*
(If different from Applicant)

**If the Applicant or Property Owner is a Trust (Living, Revocable, etc.) or a corporation (Inc., LLC, LLP, etc) or another type organization provide staff with documentation stating that the person signing the application is authorized to do so.*

State of Arkansas)
) ss.
County of Washington)

SUBSCRIBED AND SWORN TO before me, a Notary Public, this 9 day of December, 20 15.

Notary Public

My Commission Expires: 10, 2024

Feet
0 100 200
N

FILE NUMBER: B16-01
APPLICANT: DARRYL HILL
VARIANCE REQUEST: REDUCE SIDE SETBACK 20' TO 6'

CITY OF SPRINGDALE
PLANNING OFFICE
PLANNING COMMISSION MEETING

Staff Use Only

☐ Fee Paid ($75) ☐ Cash ☐ Check ☐ CC
☐ Warranty Deed
☐ Authorization of Representation
☐ Drawing/Photo or Other Exhibit

File # BK6-02

☐ *A "Notice of Violation" was issued to the Applicant/Property Owner by Code Enforcement.*

APPLICATION FOR VARIANCE

ZONING BOARD OF ADJUSTMENT
SPRINGDALE PLANNING COMMISSION
CITY OF SPRINGDALE, ARKANSAS

Applicant's Name: BlueRibbon Properties, LLC (Cari Delaughter)

Applicant's Mailing Address:

P.O. Box 178
Street Address or P.O. Box

479-636-1717
Telephone Number

Lowell, AR 72745
City, State & Zip Code

Property Owner's Name
(If different from Applicant): _____

Property Owner's Mailing Address:
(If different from Applicant):

_____
Street Address or P.O. Box

_____
Telephone Number

_____
City, State & Zip Code

Address of Variance Request: 4149 N. Thompson

Zoning District: C-5

The following information should be attached to this application:

1. $75.00 Fee
2. Warranty Deed
3. Authorization of Representation *(If the Property Owner will not be present at the meeting.)*
4. Drawings, Photos, or Other Exhibit
5. The applicant shall be responsible for providing the name and address of all adjacent property owners. The notice to all adjacent property owners must be

sent by certified mail, return receipt requested at least ten (10) days prior to the Planning Commission meeting. Evidence in the form of a signed Affidavit, that notice has been given to all adjacent property owners by certified mail, return receipt requested, will be submitted. Notification should be sent after the Planning Department has accepted the application and the date of the public hearing has been confirmed.

6. The required Affidavit and supporting exhibits (mailing receipts, list of property owners of record and copy of notice) shall be filed with the Planning Office no later than seven (7) days prior to the meeting date.

SETBACK VARIANCES:

☒ *Not Applicable*

Please complete the following to apply for a setback variance. Required setbacks vary by zoning district, please ***contact staff*** *to determine the required setback.*

Required: Front:_____ Side:_____ Back:_____
(This is the minimum required by the Springdale Code of Ordinance)

Requested: Front:_____ Side:_____ Back:_____
(if granted what the setback would be.)

Variance: Front:_____ Side:_____ Back:_____
(The difference between the "Required" and the "Requested" setback)

VARIANCES OTHER THAN SETBACK:

☐ *Not Applicable*

Use the space below to describe the variance request. If possible please reference the applicable section of the Springdale Code of Ordinance. Attach a separate sheet if needed.

This request is to apply for a variance from the parking lot paving requirement.

The Zoning Board of Adjustment, after a hearing, may vary the application of certain provisions of the Springdale Code of Ordinance. The variance can be granted when, in the Board's opinion, the specific case will not be contrary to public interest, where, owing to special conditions, a literal enforcement of the provisions of the ordinance would result in unnecessary hardship, and also finds ALL of the following:

The Applicant must respond to items 1, 2, and 3.

1. That special conditions and circumstances exist which are particular to the land, structure, or building involved and which are not applicable to other lands, structures, or buildings in the same district. **Use the space below to describe to the Board of Adjustment the special conditions and circumstances that exist on the property (attach a separate sheet if necessary):**

The special condition that exists here is that future development is anticipated and those intended improvements could be hindered if the lot is paved now.

2. That the literal interpretation of the provision of the Springdale Code of Ordinance would deprive the applicant of rights commonly enjoyed by other properties in the same district. **Use the space below to explain the rights of which the applicant is being deprived (attach a separate sheet if necessary):**

The right being deprived Blue Ribbon Properties, LLC is that they cannot rent or lease their property without undue hardship.

3. That the special conditions and circumstances do not result from the actions of the applicant. **Use the space below to explain how the special conditions or circumstances occurred (attach a separate sheet if necessary):**

The very nature of this situation indicates that the applicant's actions did not cause the condition or circumstance to occur. In other words, the fact that Blue Ribbon Properties, LLC has an opportunity to rent the front portion of their property at this time and will develop the back at a later date has caused the special condition to exist.

4. That granting the variance will not confer on the applicant any special privilege that is denied by this ordinance to other lands, structures, or buildings in the same district.

5. That the variance granted is the minimum variance that will make possible that reasonable use of the land, building or structure.

6. That the granting of the variance will be in harmony with the general purpose and intent of this ordinance, and will not be injurious to the neighborhood, or otherwise detrimental to the public welfare.

VERIFICATION

I/We, the undersigned, herewith state on solemn oath that we have read the above and foregoing application for rezoning and that all the facts, statements, and allegations therein contained are true and correct to the best of my knowledge and belief and that complete disclosure of all material facts have been made.

Applicant Signature*

Property Owner Signature*
(If different from Applicant)

Applicant Signature*

Property Owner Signature*
(If different from Applicant)

**If the Applicant or Property Owner is a Trust (Living, Revocable, etc.) or a corporation (Inc., LLC, LLP, etc) or another type organization provide staff with documentation stating that the person signing the application is authorized to do so.*

State of Arkansas)
) ss.
County of Washington)

SUBSCRIBED AND SWORN TO before me, a Notary Public, this 14 day of December, 2015.

DEBBIE A. POUNDERS
WASHINGTON COUNTY
NOTARY PUBLIC - ARKANSAS
My Commission Expires December 10, 2024
Commission No. 12402006

Notary Public

Feet
0 100 200
N

FILE NUMBER: B16-02
APPLICANT: BLUE RIBBON PROPERTIES, LLC
VARIANCE REQUEST: DELETE PAVED PARKING REQUIREMENT

CITY OF SPRINGDALE
PLANNING OFFICE
PLANNING COMMISSION MEETING

WGR

4264 North Thompson
Springdale, Arkansas 72764
phone: (479) 582-5060
fax: (479) 582-5101

WGR LLC

December 28, 2015

Planning and Community Development
City of Springdale
201 Spring Street
Springdale, AR 72764

Ref: Variance request for 4149 North Thompson

To Whom It May Concern:

I own land at 4264 North Thompson, Springdale, Arkansas (right across the street).

I received a notice of a public hearing regarding the request by Blue Ribbon Properties to have a variance from the requirement to pave their parking lot. I typically try to leave other business people free to do what they want with their property and expect the same treatment in return.

When I applied to have a metal building put on my property, I was required by the City to pave the driveway (I had asked for gravel driveway since there would be heavy equipment on it at times but I was turned down). Additionally, I was required to brick up the metal building about 3 feet high along the front for aesthetic reasons as well as put in landscaping. I begrudgingly did all these things at significant extra costs.

I guess my only comment would be, if these are the rules we have to abide by to help beautify north Springdale along Thompson then apply the rules fairly across the board.

Sincerely,

William G. Reich
Owner

Priority BANK
member FDIC

Main Branch
400 West Commercial Street
Ozark, AR 72949
479-667-4136
800-922-6936
Fax 479-667-4062

Fayetteville Branch
3401 East Mission Blvd
Fayetteville, AR 72703
479-587-1122
Fax 479-587-1123
866-694-1123

Prairie Grove Branch
703 East Douglas
Prairie Grove, AR 72753
Phone: 479-846-4000
Fax: 479-846-4010

December 29, 2015

Springdale Planning Commission
1311 Clayton St
Springdale, AR 72762

Attn: Debbie Pounders

This letter is in reference to the notification we received for the application for a variance from Blue Ribbon Properties, LLC at property located at: 4149 N. Thompson.

Priority Bank's concern with this is if we give a variance on this request, would it open up the flood gates to other requesting for the same? If everyone in this area was allowed the same variance, what would it do to the value of our property but more important what would this area of Springdale look like in 10 years.

Even though this area has been slow to develop, we feel that it is a prime area for future growth in Springdale.

Sincerely,

Ray Stidham, President
Priority Bank

RAS/clr

Debbie Pounders

From: Junie Presley <cjpres@madisoncounty.net>
Sent: Sunday, December 13, 2015 8:30 PM
To: Debbie Pounders
Cc: Cari DeLaughter
Subject: Sidewalk Wavier Request

Ms Pounders: Please consider this email our request for a wavier of the sidewalk requirement on the lot owned by Blue Ribbon Properties, LLC , 4149 N. Thompson in Springdale, AR.

We are proceeding with the variance request on the parking lot paving, I will have it to you before the 16th. Please let me know if you need anything else. Please confirm that you received this message.

Thank you for all your help in this matter: Charlee Presley

W16-01

Staff Use Only

☐ Fee Paid ($75) ☐ Cash ☐ Check ☐ CC
☐ Warranty Deed
☐ Authorization of Representation
☐ Drawing/Photo or Other Exhibit

File # BK03

☐ *A "Notice of Violation" was issued to the Applicant/Property Owner by Code Enforcement.*

APPLICATION FOR VARIANCE

ZONING BOARD OF ADJUSTMENT
SPRINGDALE PLANNING COMMISSION
CITY OF SPRINGDALE, ARKANSAS

Applicant's Name: Linda Burkard

Applicant's Mailing Address:

5423 Northern Dancer
Street Address or P.O. Box

(650) 853-0445
Telephone Number

Springdale Ar. 72762
City, State & Zip Code

Property Owner's Name
(If different from Applicant): _____

Property Owner's Mailing Address:
(If different from Applicant):

_____
Street Address or P.O. Box

_____
Telephone Number

_____
City, State & Zip Code

Address of Variance Request: 5423 Northern Dancer Springdale Ar. 72762

Zoning District: _____

The following information should be attached to this application:

1. $75.00 Fee
2. Warranty Deed
3. Authorization of Representation *(If the Property Owner will not be present at the meeting.)*
4. Drawings, Photos, or Other Exhibit
5. The applicant shall be responsible for providing the name and address of all adjacent property owners. This must be a certified list by a licensed abstractor

or licensed land surveyor within the past sixty (60) days. The notice to all adjacent property owners must be sent by certified mail, return receipt requested at least ten (10) days prior to the Planning Commission meeting. Evidence in the form of a signed Affidavit, that notice has been given to all adjacent property owners by certified mail, return receipt requested, will be submitted. Notification should be sent after the Planning Department has accepted the application and the date of the public hearing has been confirmed.

6. The required Affidavit and supporting exhibits (mailing receipts, list of property owners of record and copy of notice) shall be filed with the Planning Office no later than seven (7) days prior to the meeting date.

SETBACK VARIANCES:

☒ *Not Applicable*

Please complete the following to apply for a setback variance. Required setbacks vary by zoning district, please ***contact staff*** *to determine the required setback.*

Required: Front:_____ Side:_____ Back:_____
(This is the minimum required by the Springdale Code of Ordinance)

Requested: Front:_____ Side:_____ Back:_____
(if granted what the setback would be.)

Variance: Front:_____ Side:_____ Back:_____
(The difference between the "Required" and the "Requested" setback)

VARIANCES OTHER THAN SETBACK:

☐ *Not Applicable*

Use the space below to describe the variance request. If possible please reference the applicable section of the Springdale Code of Ordinance. Attach a separate sheet if needed.

Increase height of garage from 16' to 22'6"

The Zoning Board of Adjustment, after a hearing, may vary the application of certain provisions of the Springdale Code of Ordinance. The variance can be granted when, in the Board's opinion, the specific case will not be contrary to public interest, where, owing to special conditions, a literal enforcement of the provisions of the ordinance would result in unnecessary hardship, and also finds ***ALL of the following:***

The Applicant must respond to items 1, 2, and 3.

1. That special conditions and circumstances exist which are particular to the land, structure, or building involved and which are not applicable to other lands, structures, or buildings in the same district. **Use the space below to describe to the Board of Adjustment the special conditions and circumstances that exist on the property (attach a separate sheet if necessary):**

   This is a detatched garage that can not meet the height requirement due to the pitch of the roof. In order to have the pitch needed and wall height for the cars we need to be taller that what is allowed.

2. That the literal interpretation of the provision of the Springdale Code of Ordinance would deprive the applicant of rights commonly enjoyed by other properties in the same district. **Use the space below to explain the rights of which the applicant is being deprived (attach a separate sheet if necessary):**

   I am not aware of any buildings in the neighborhood that have this.

3. That the special conditions and circumstances do not result from the actions of the applicant. **Use the space below to explain how the special conditions or circumstances occurred (attach a separate sheet if necessary):**

   to make this detatched garage work it has to be 22 feet tall or we can not have the pitch on the roof that the plans call for.

4. That granting the variance will not confer on the applicant any special privilege that is denied by this ordinance to other lands, structures, or buildings in the same district.

5. That the variance granted is the minimum variance that will make possible that reasonable use of the land, building or structure.

6. That the granting of the variance will be in harmony with the general purpose and intent of this ordinance, and will not be injurious to the neighborhood, or otherwise detrimental to the public welfare.

VERIFICATION

I/We, the undersigned, hereby state on solemn oath that we have read the above and foregoing application for Zoning and that all the statements, arguments, and allegations therein contained are true and correct to the best of my knowledge and belief and that complete disclosure of all material facts have been made.

J Burkard
Applicant Signature*

Property Owner Signature*
(If different from Applicant)

Linda Burkard
Applicant Signature*

Property Owner Signature*
(If different from Applicant)

If the Applicant or Property Owner is a Trust (Living, Revocable, etc.) or a corporation (Inc., LLC, LLP, etc) or another type organization provide staff with documentation stating that the person signing the application is authorized to do so.

State of Arkansas)
) ss.
County of Benton)

SUBSCRIBED AND SWORN TO before me, a Notary Public, this 15th day of December, 20 15.

Linda M. Allen
Notary Public

LINDA M. ALLEN
MY COMMISSION # 12381526
EXPIRES: May 2, 2021
Benton County

Feet
0 100 200
N

FILE NUMBER: B16-03
APPLICANT: LINDA BURKARD
VARIANCE REQUEST: INCREASE HEIGHT OF ACCESSORY STRUCTURE

CITY OF SPRINGDALE
PLANNING OFFICE
PLANNING COMMISSION MEETING

Staff Use Only

☐ Fee Paid ($75) ☐*Cash* ☐*Check* ☐*CC*
☐ Warranty Deed
☐ Authorization of Representation
☐ Drawing/Photo or Other Exhibit

File # B1604

☐*A "Notice of Violation" was issued to the Applicant/Property Owner by Code Enforcement*

APPLICATION FOR VARIANCE

ZONING BOARD OF ADJUSTMENT
SPRINGDALE PLANNING COMMISSION
CITY OF SPRINGDALE, ARKANSAS

Applicant's Name: Michael Pennington – Gateway Homes, LLC

Applicant's Mailing Address:

P.O. Box 6095
Street Address or P.O. Box

479-957-5422
Telephone Number

Springdale, AR 72766
City, State & Zip Code

Property Owner's Name
(If different from Applicant): Michael Pennington

Property Owner's Mailing Address:
(If different from Applicant):

Same as Applicant

Address of Variance Request: Lynch's Prairie Cove (Lot 2 Block 43, Har-Ber Meadows Phase IX)

Zoning District: Har-Ber PUD

The following information should be attached to this application:

1. $75.00 Fee
2. Warranty Deed
3. Authorization of Representation *(If the Property Owner will not be present at the meeting.)*
4. Drawings, Photos, or Other Exhibit
5. The applicant shall be responsible for providing the name and address of all adjacent property owners. This must be a certified list by a licensed abstractor or licensed land surveyor within the past sixty (60) days. The notice to all

adjacent property owners must be sent by certified mail, return receipt requested at least ten (10) days prior to the Planning Commission meeting. Evidence in the form of a signed Affidavit, that notice has been given to all adjacent property owners by certified mail, return receipt requested, will be submitted. Notification should be sent after the Planning Department has accepted the application and the date of the public hearing has been confirmed.

6. The required Affidavit and supporting exhibits (mailing receipts, list of property owners of record and copy of notice) shall be filed with the Planning Office no later than seven (7) days prior to the meeting date.

SETBACK VARIANCES: ☐ *Not Applicable*

Please complete the following to apply for a setback variance. Required setbacks vary by zoning district, please ***contact staff*** *to determine the required setback.*

Required: Front:_____ Side:_____ Back:_____
(This is the minimum required by the Springdale Code of Ordinance)

Requested: Front:_____ Side:_____ Back:_____
(if granted what the setback would be.)

Variance: Front:_____ Side:_____ Back:_____
(The difference between the "Required" and the "Requested" setback)

VARIANCES OTHER THAN SETBACK: ☐ *Not Applicable*

Use the space below to describe the variance request. If possible please reference the applicable section of the Springdale Code of Ordinance. Attach a separate sheet if needed.

The Petitioner is seeking a variance from the Multi-Family Design Standards Site Planning requirements of a Multi-Family Play Area, Common Open Space, and On-Site Community Recreational Amenities (Multi-Family Design Guidelines and Standards III.A.2, 3, & 4). The Petitioner is also seeking a variance from the Perimeter Landscaping Requirements (Ch. 56, Section 31.3).

The Zoning Board of Adjustment, after a hearing, may vary the application of certain provisions of the Springdale Code of Ordinance. The variance can be granted when, in the Board's opinion, the specific case will not be contrary to public interest, where, owing to special conditions, a literal enforcement of the provisions of the ordinance would result in unnecessary hardship, and also finds ***ALL of the following:***

1. **That special conditions and circumstances exist which are particular to the land, structure, or building involved and which are not applicable to other lands, structures, or buildings in the same district.**

   Multi-Family Design Standards:

   Multi-Family Play Area – This development is intended for residents of age 60 and older, and is next door to an assisted-living facility, therefore a required Play Area is unnecessary for the development's proposed use. The topography of the undeveloped portion of the lot is also not conducive to constructing a 2,500 square foot play area.

   Common Open Space – A large portion of the southern area of the lot contains a drainage swale. Per the Design Standards, this area cannot be counted towards the Common Open Space requirements unless it is determined by the City that the area us useful for recreation. The Petitioner submits that this area and the lake area in the Har-Ber Property Owner's Association-owned property to the west provide adequate fulfillment of the recreational requirement.

   On-Site Community Recreational Amenities – Within the vicinity of this project, there is a swimming pool, a resident clubhouse, a playground, multiple park areas with gazebos/pavilions, picnic tables, etc. As this development is only required to have one amenity, the Petitioner feels that the Har-Ber Meadows PUD provides more than what is required for Recreational Amenities.

Perimeter Landscaping Requirements:

Along the western boundary is a nice lake and open common area to be used by the residents of the Har-Ber Meadows PUD. The apartment building was sited along the western property so there are views of the green from the balconies of the properties. These homes will be marketed toward an aging demographic, so it would be wonderful if they could see out over the lake without having to venture out as often.

Along the eastern boundary there is a nicely landscaped property with shrubs. This property is also at the end of the street where there would be less visibility from other external properties.

The owner is, however, proposing to install perimeter trees along the rear of the property.

2. **That the literal interpretation of the provision of the Springdale Code of Ordinance would deprive the applicant of rights commonly enjoyed by other properties in the same district.**

Multi-Family Design Standards:

Multi-Family Play Area – The Petitioner feels that as the Har-Ber PUD provides children's play areas, and no other surrounding developments have play areas (including the Church of Jesus Christ of Latter-Day Saints that is within the immediate vicinity of the proposed development), that this requirement would place an undue burden on the developer that has not been placed on any other development in the area.

Common Open Space – The Petitioner feels that this development should be able to utilize the Common Areas as set forth by the Har-Ber PUD to fulfill this requirement. There is ample space in the immediate vicinity that can be, and is currently used as, recreation areas. This property is already dedicated as common property and is owned by the Har-Ber Property Owner's Association.

On-Site Community Recreational Amenities – The Petitioner feels that this proposed development should be able to use the amenities that are already in the vicinity to fulfill this requirement. Other nearby properties in Har-Ber Meadows have not been required to install separate Recreational Amenities. The PUD established these amenities, and the further requirement of more amenities would be redundant and an unnecessary expense to the developer.

Perimeter Landscaping Requirements:

Literal interpretation would force the owner to install some 28 trees along it boundary when no other properties in the area have done so. The owner will though install 6 perimeter trees along the drainage swale as perimeter trees.

3. **That the special conditions and circumstances do not result from the actions of the applicant.**

Multi-Family Design Standards:

Multi-Family Play Area – The granting of a variance from the requirement of a multi-family play area is a case of limited space, unsuitable topography, and that a Play Area would not be utilized by the residents. No action taken by the Developer resulted in this hardship.

Common Open Space – The need of a variance from Common Open Space requirements results from the existence of a large drainage easement and swale on the southern end of the property that cannot be used to meet this requirement. It also results from the fact that the Har-Ber Meadows PUD provides ample open space in the form of lakes and parks, much of which is within the immediate vicinity of the property. There was no action taken by the Developer that resulted in this hardship.

On-Site Community Recreational Amenities – A variance from the requirement of On-Site Community Recreation Amenities would not be the result of any action taken by the Developer. Rather, the existence and establishment of ample recreation amenities as a part of the Har-Ber PUD, many that are in the immediate vicinity of the proposed development, negates the need for additional amenities.

Perimeter Landscaping Requirements:

The special conditions are the result of general idea of the Har-Ber community being one whole. The intent of the landscape ordinance is to provide separation from properties and protection from incompatible uses. The intent of the PUD, however, is not to provide separation, but allow the properties to be compatible with one another.

This along with the fact that no other properties in the area have not completed perimeter landscaping to this extent makes these circumstances not the result of the applicant's actions.

VERIFICATION

I/We, the undersigned, herewith state on solemn oath that we have read the above and foregoing application for rezoning and that all the facts, statements, and allegations therein contained are true and correct to the best of my knowledge and belief and that complete disclosure of all material facts have been made.

Michael Sommer

Applicant Signature*

Property Owner Signature*
(If different from Applicant)

Applicant Signature*

Property Owner Signature*
(If different from Applicant)

**If the Applicant or Property Owner is a Trust (Living, Revocable, etc.) or a corporation (Inc., LLC, LLP, etc) or another type organization provide staff with documentation stating that the person signing the application is authorized to do so.*

State of Arkansas)
) ss.
County of Washington)

SUBSCRIBED AND SWORN TO before me, a Notary Public, this 16th day of December, 20 15.

Notary Public

EMBRY ROBERTS
NOTARY PUBLIC
WASHINGTON COUNTY - ARKANSAS
MISSION NO. 12358206
EXPIRES: JANUARY 1, 2017

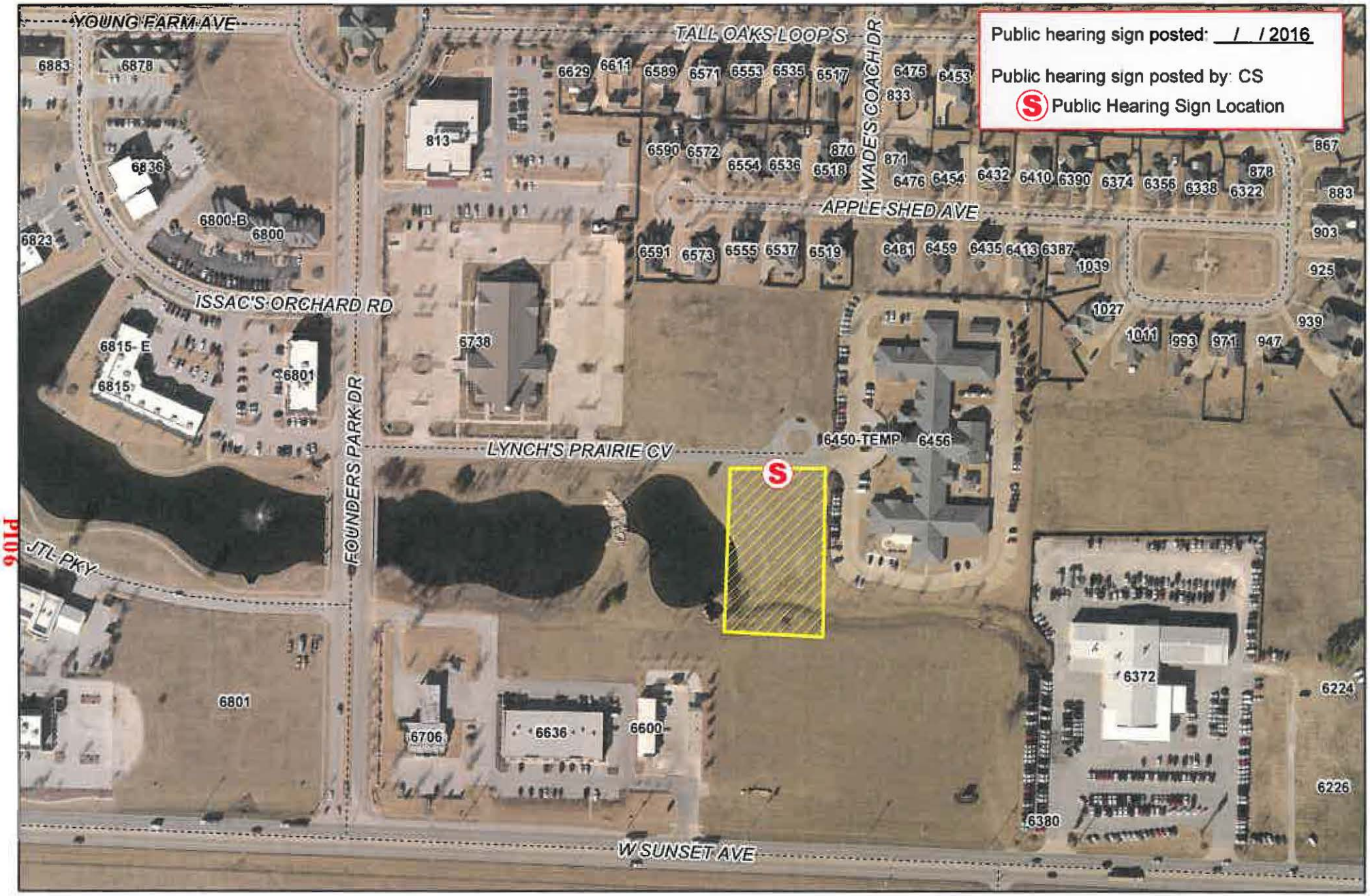

Feet
0 100 200
N

FILE NUMBER: B16-04
APPLICANT: GATEWAY HOMES
VARIANCE REQUEST: MODIFICATION OF LANDSCAPING AND MULTIFAMILY DESIGN STANDARDS

CITY OF SPRINGDALE
PLANNING OFFICE
PLANNING COMMISSION MEETING

Staff Use Only

☐ Fee Paid ($75) ☐Cash ☐Check ☐CC
☐ Warranty Deed
☐ Authorization of Representation
☐ Drawing/Photo or Other Exhibit

File # _____

☐ *A "Notice of Violation" was issued to the Applicant/Property Owner by Code Enforcement.*

APPLICATION FOR VARIANCE
ZONING BOARD OF ADJUSTMENT
SPRINGDALE PLANNING COMMISSION
CITY OF SPRINGDALE, ARKANSAS

Applicant's Name: DAVID JANES

Applicant's Mailing Address:

13089 Buddy Elkins Rd.
Street Address or P.O. Box

479-871-0046
Telephone Number

FARMINGTON AR 72730
City, State & Zip Code

Property Owner's Name
(If different from Applicant): GARY GEORGE

Property Owner's Mailing Address:
(If different from Applicant):

_____
Street Address or P.O. Box

_____
Telephone Number

_____
City, State & Zip Code

Address of Variance Request: 4428 N. THOMPSON

Zoning District: C-2

The following information should be attached to this application:

1. $75.00 Fee
2. Warranty Deed
3. Authorization of Representation *(If the Property Owner will not be present at the meeting.)*
4. Drawings, Photos, or Other Exhibit
5. The applicant shall be responsible for providing the name and address of all adjacent property owners. The notice to all adjacent property owners must be

sent by certified mail, return receipt requested at least ten (10) days prior to the Planning Commission meeting. Evidence in the form of a signed Affidavit, that notice has been given to all adjacent property owners by certified mail, return receipt requested, will be submitted. Notification should be sent after the Planning Department has accepted the application and the date of the public hearing has been confirmed.

6. The required Affidavit and supporting exhibits (mailing receipts, list of property owners of record and copy of notice) shall be filed with the Planning Office no later than seven (7) days prior to the meeting date.

SETBACK VARIANCES:

☒ *Not Applicable*

Please complete the following to apply for a setback variance. Required setbacks vary by zoning district, please ***contact staff*** *to determine the required setback.*

Required: Front:_____ Side:_____ Back:_____
(This is the minimum required by the Springdale Code of Ordinance)

Requested: Front:_____ Side:_____ Back:_____
(if granted what the setback would be.)

Variance: Front:_____ Side:_____ Back:_____
(The difference between the "Required" and the "Requested" setback)

VARIANCES OTHER THAN SETBACK:

☐ *Not Applicable*

Use the space below to describe the variance request. If possible please reference the applicable section of the Springdale Code of Ordinance. Attach a separate sheet if needed.

REQUEST FOR VARIANCE ON PAVED PARKING

The Zoning Board of Adjustment, after a hearing, may vary the application of certain provisions of the Springdale Code of Ordinance. The variance can be granted when, in the Board's opinion, the specific case will not be contrary to public interest, where, owing to special conditions, a literal enforcement of the provisions of the ordinance would result in unnecessary hardship, and also finds ***ALL of the following:***

The Applicant must respond to items 1, 2, and 3.

1. That special conditions and circumstances exist which are particular to the land, structure, or building involved and which are not applicable to other lands, structures, or buildings in the same district. **Use the space below to describe to the Board of Adjustment the special conditions and circumstances that exist on the property (attach a separate sheet if necessary):**

This property, along with adjacent, is listed for sale & redevelopment. The petitioning use is a temp lease and the condition of existing improvements work not support investment required for paving. The only alternative to a variance is for the property to remain vacant until it can be sold.

2. That the literal interpretation of the provision of the Springdale Code of Ordinance would deprive the applicant of rights commonly enjoyed by other properties in the same district. **Use the space below to explain the rights of which the applicant is being deprived (attach a separate sheet if necessary):**

Without variance we will be unable to lease the property until it can be sold for redevelopment.

3. That the special conditions and circumstances do not result from the actions of the applicant. **Use the space below to explain how the special conditions or circumstances occurred (attach a separate sheet if necessary):**

Property was purchased with intent to redevelop but that plan fell through necessitating that it be listed for resale. Temp lease and occupancy will keep it from deteriorating faster that if it is vacant and unused.

4. That granting the variance <u>will not</u> confer on the applicant any special privilege that is denied by this ordinance to other lands, structures, or buildings in the same district.

5. That the variance granted is the minimum variance that **will** make possible that reasonable use of the land, building or structure.

6. That the granting of the variance will be in harmony with the general purpose and intent of this ordinance, and will not be injurious to the neighborhood, or otherwise detrimental to the public welfare.

VERIFICATION

I/We, the undersigned, herewith state on solemn oath that we have read the above and foregoing application for rezoning and that all the facts, statements, and allegations therein contained are true and correct to the best of my knowledge and belief and that complete disclosure of all material facts have been made.

Applicant Signature*

Property Owner Signature*
(If different from Applicant)

Applicant Signature*

Property Owner Signature*
(If different from Applicant)

If the Applicant or Property Owner is a Trust (Living, Revocable, etc.) or a corporation (Inc., LLC, LLP, etc) or another type organization provide staff with documentation stating that the person signing the application is authorized to do so.

State of Arkansas)
) ss.
County of Washington)

SUBSCRIBED AND SWORN TO before me, a Notary Public, this 16 day of December, 20 15.

NORA D. HALL
COMM. #12375
NOTARY PUBLIC
EXP. 01/27/2020
WASHINGTON COUNTY, AR

Notary Public

N

Feet
0 100 200

FILE NUMBER: B16-05
APPLICANT: DAVID JANES
VARIANCE REQUEST: DELETION OF PAVED PARKING REQUIREMENTS

CITY OF SPRINGDALE
PLANNING OFFICE
PLANNING COMMISSION MEETING

Debbie Pounders

From: Junie Presley <cjpres@madisoncounty.net>
Sent: Sunday, December 13, 2015 8:30 PM
To: Debbie Pounders
Cc: Cari DeLaughter
Subject: Sidewalk Wavier Request

Ms Pounders: Please consider this email our request for a wavier of the sidewalk requirement on the lot owned by Blue Ribbon Properties, LLC , 4149 N. Thompson in Springdale, AR.

We are proceeding with the variance request on the parking lot paving, I will have it to you before the 16th. Please let me know if you need anything else. Please confirm that you received this message.

Thank you for all your help in this matter: Charlee Presley

W16-01

12/14/2015

Planning and Community Development
City of Springdale
201 Spring Street
Springdale AR 72764

RE: Kevin Walker
2529 McRay Ave
Springdale, AR 72762

Honorable Judge and Officers of Planning Commission:

I am writing in regards to my property located at 2529 McRay Ave, Springdale AR 72762. I built this property in 2015. At the time that I decided on the design elements of this property I took into consideration the neighboring properties. I wanted to conform to the existing homes in the neighborhood. Therefore I built my home to match the homes already in the neighborhood.

I am asking the Court and Planning Commission to consider a waiver of constructing any sidewalks on my property to maintain that same conformation. The properties that already exist do not have sidewalks, (see attachments) therefore so that the neighborhood can retain the same architectural appearance I ask that on my property sidewalks are not required or constructed.

Thank you in advance for your time and consideration in this matter.

Sincerely,

Kevin Walker

W16-02

old House

Google Maps 2529 McRay Ave

Image capture: Jun 2013 © 2015 Google

Springdale, Arkansas

Street View - Jun 2013

Google Maps 2529 McRay Ave

Image capture: Jun 2013 © 2015 Google

Springdale, Arkansas

Street View - Jun 2013

New House

To the Springdale Planning Commission:

I would like to request a waiver of sidewalk requirements for property located at 1329 N. Monitor Road.

Respectfully,

Melvin Mounce Melvin Mounce

W 1603

826 S. Primrose Road current address

To the Springdale Planning Commission:

I would like to request a waiver of sidewalk requirements for property located at 1417 N. Monitor Road.

Respectfully,

Joye & Terry Mounce

Terry Mounce

W16-04