APPENDIX 3A

Table 3.1
Minimum Slope Required
to Produce Scouring Velocity

Pipe Size (Inches)	Concrete Pipe Slope ft./ft.	Corrugated Metal Pipe ft./ft.
18	0.0018	0.0060
21	0.0015	0.0049
24	0.0013	0.0041
27	0.0011	0.0035
30	0.0009	0.0031
36	0.0007	0.0024
42	0.0006	0.0020
48	0.0005	0.0016
54	0.0004	0.0014
60	0.0004	0.0012
66	0.0004	0.0011
72	0.0003	0.0010
78	0.0003	0.0009
84	0.0003	0.0008
96	0.0002	0.0007

Table 3.2

PERMISSIBLE VELOCITIES FOR CHANNELS LINED WITH GRASS

COVER	SLOPE RANGE (PERCENT)	PERMISSIBLE VELOCITY, fps	
		EROSION-RESISTANT SOILS	EASILY ERODED SOILS
Bermuda Grass	0-5	8	6
	5-10	7	5
	>10	6	4
Buffalo grass, Kentucky bluegrass, smooth brome, blue grama	0-5	7	5
	5-10	6	4
	>10	5	3
Grass mixture	0-5	5	4
	5-10	4	3
	Do not use on slopes steeper than 10%		
Lespedeza Sericea, weeping love grass, ischaemum (yellow bluestem), alfalfa, crabgrass	0-5	3.5	2.5
	Do not use on slopes steeper than 5%; except for side slopes in a combination channel		
Annuals - used on mild slopes or as temporary protection until permanent covers are established. Common lespedeza, Sudan grass	0-5	3.5	2.4
	Use on slopes steeper than 3% is not recommended		

REMARKS: The values apply to average, uniform stands of each type of cover. Use velocities exceeding 5 fps only where good covers and proper maintenance can be obtained.

SOURCE: AHTD

City of SPRINGDALE Arkansas

PERMISSIBLE VELOCITIES FOR CHANNELS LINED WITH GRASS

Table 3.2

HYDRAULIC DATA FOR PIPE

MATERIAL	N-VALUE
(A) - CONCRETE	
Pre-Cast	0.011 TO 0.013
Cast-in-Place	
Steel forms	0.012 TO 0.013
Wood forms	0.013 TO 0.015
(B) - PLASTIC	
Corrugated polyethylene	0.024 TO 0.026
Corrugated polyethylene (smooth inter.)	0.010 TO 0.012
Polyvinyl chloride (smooth interior)	0.009 TO 0.011
(C) - METAL	

sheet 2 of 2

City of
SPRINGDALE
Arkansas

(C)-CORRUGATED METAL PIPE

PIPE TYPE	PAVEMENT CONDITIONS	ANNULAR CORRUGATIONS DIAM.	CORRUG.	N-VALUE	HELICAL CORRUGATIONS N-VALUE)								
					CORRUGATION SIZE								
					(1-1/2 X 1/4)				(2-2/3 X 1/2)				
					PIPE DIAMETER								
					8-IN	10-IN	12-IN	18-IN	24-IN	36-IN	48-IN	60-IN	>60-IN
CORRUGATED PIPE	UNPAVED	ALL	(2-2/3 X 1/2)	0.024	0.012	0.014	0.011	0.013	0.016	0.018	0.020	0.021	0.021
	25% PAVED	ALL	(2-2/3 X 1/2)	0.021					0.014	0.017	0.020	0.019	0.019
	FULLY PAVED	ALL	(2-2/3 X 1/2)	0.012					0.012	0.012	0.012	0.012	0.012
					CORRUGATION SIZE - (3 X 1)								
					PIPE DIAMETER								
					48-IN	54-IN	60-IN	66-IN	72-IN	78-IN	>78-IN		
CORRUGATED PIPE	UNPAVED	ALL	(3 X 1)	0.027	0.023	0.023	0.024	0.025	0.026	0.027	0.027		
	25% PAVED	ALL	(3 X 1)	0.023	0.020	0.020	0.021	0.022	0.022	0.023	0.023		
	FULLY PAVED	ALL	(3 X 1)	0.012	0.012	0.012	0.012	0.012	0.012	0.012	0.012		
					CORRUGATION SIZE - (5 X 1)								
					PIPE DIAMETER								
					54-IN	60-IN	66-IN	72-IN	>72-IN				
CORRUGATED PIPE	UNPAVED	ALL	(5 X 1)	0.027	0.022	0.023	0.024	0.025	0.026				
	25% PAVED	ALL	(5 X 1)	0.023	0.019	0.020	0.021	0.022	0.022				
	FULLY PAVED	ALL	(5 X 1)	0.012	0.012	0.012	0.012	0.012	0.012				
STRUCTURAL PLATE PIPE	UNPAVED	5-FT	(6 X 2)	0.033									
	"	7-FT	(6 X 2)	0.032									
	"	10-FT	(6 X 2)	0.03									
	"	15-FT	(6 X 2)	0.028									
	25% PAVED	5-FT	(6 X 2)	0.028									
	"	7-FT	(6 X 2)	0.027									
	"	10-FT	(6 X 2)	0.026									
	"	15-FT	(6 X 2)	0.024									
TYPE 1-R SPIRAL RIB	N/A				CORRUGATION SIZE - (3/4 X 3/4 X 7-1/2) ALL DIAMETERS N-VALUE = 0.012								

Table 3.3 (2 of 2)

Values of K_e for Determining Loss of Head Due to Sudden Enlargement in Pipes, from the Formula

$$H_2 = K_2(V_1^2/2g) \quad (AISI\ 1985)$$

d_2/d_1 = ratio of larger pipe to smaller pipe

V_1 = velocity in smaller pipe

$\frac{d_2}{d_1}$	Velocity, V_1, in feet per second												
	2	3	4	5	6	7	8	10	12	15	20	30	40
1.2	.11	.10	.10	.10	.10	.10	.10	.09	.09	.09	.09	.09	.08
1.4	.26	.26	.25	.24	.24	.24	.24	.23	.23	.22	.22	.21	.20
1.6	.40	.39	.38	.37	.37	.36	.36	.35	.35	.34	.33	.32	.32
1.8	.51	.49	.48	.47	.47	.46	.46	.45	.44	.43	.42	.41	.40
2.0	.60	.58	.56	.55	.55	.54	.53	.52	.52	.51	.50	.48	.47
2.5	.74	.72	.70	.69	.68	.67	.66	.65	.64	.63	.62	.60	.58
3.0	.83	.80	.78	.77	.76	.75	.74	.73	.72	.70	.69	.67	.65
4.0	.92	.89	.87	.85	.84	.83	.82	.80	.79	.78	.76	.74	.72
5.0	.96	.93	.91	.89	.88	.87	.86	.84	.83	.82	.80	.77	.75
10.0	1.00	.99	.96	.95	.93	.92	.91	.89	.88	.86	.84	.82	.80
∞	1.00	1.00	.98	.96	.95	.94	.93	.91	.90	.88	.86	.83	.81

Values of K_2 for Determining Loss of Head Due to Gradual Enlargement in Pipes from the Formula

$$H_2 = K_2(V_1^2/2g) \quad (AISI\ 1985)$$

d_2/d_1 = ratio of diameter of larger pipe to diameter of smaller pipe. Angle of cone is twice the angle between the axis of the cone and its side.

$\frac{d_2}{d_1}$	Angle of cone													
	2°	4°	6°	8°	10°	15°	20°	25°	30°	35°	40°	45°	50°	60°
1.1	.01	.01	.01	.02	.03	.05	.10	.13	.16	.18	.19	.20	.21	.23
1.2	.02	.02	.02	.03	.04	.09	.16	.21	.25	.29	.31	.33	.35	.37
1.4	.02	.03	.03	.04	.06	.12	.23	.30	.36	.41	.44	.47	.50	.53
1.6	.03	.03	.04	.05	.07	.14	.26	.35	.42	.47	.51	.54	.57	.61
1.8	.03	.04	.04	.05	.07	.15	.28	.37	.44	.50	.54	.58	.61	.65
2.0	.03	.04	.04	.05	.08	.16	.29	.38	.46	.52	.56	.60	.63	.68
2.5	.03	.04	.04	.05	.08	.16	.30	.39	.48	.54	.58	.62	.65	.70
3.0	.03	.04	.04	.05	.08	.16	.31	.40	.48	.55	.59	.63	.66	.71
∞	.03	.04	.05	.06	.08	.16	.31	.40	.49	.56	.60	.64	.67	.72

Values of K_3 for Determining Loss of Head Due to Sudden Contraction from the Formula

$$H_3 = K_3(V_2^2/2g \ (AISI\ 1985)$$

d_2/d_1 = ratio of larger to smaller diameter

V_2 = velocity in smaller pipe

$\frac{d_2}{d_1}$	Velocity, V_2, in feet per second												
	2	3	4	5	6	7	8	10	12	15	20	30	40
1.1	.03	.04	.04	.04	.04	.04	.04	.04	.04	.04	.05	.05	.06
1.2	.07	.07	.07	.07	.07	.07	.07	.08	.08	.08	.09	.10	.11
1.4	.17	.17	.17	.17	.17	.17	.17	.18	.18	.18	.18	.19	.20
1.6	.26	.26	.26	.26	.26	.26	.26	.26	.26	.25	.25	.25	.24
1.8	.34	.34	.34	.34	.34	.34	.33	.33	.32	.32	.31	.29	.27
2.0	.38	.38	.37	.37	.37	.37	.36	.36	.35	.34	.33	.31	.29
2.2	.40	.40	.40	.39	.39	.39	.39	.38	.37	.37	.35	.33	.30
2.5	.42	.42	.42	.41	.41	.41	.40	.40	.39	.38	.37	.34	.31
3.0	.44	.44	.44	.43	.43	.43	.42	.42	.41	.40	.39	.36	.33
4.0	.47	.46	.46	.46	.45	.45	.45	.44	.43	.42	.41	.37	.34
5.0	.48	.48	.47	.47	.47	.46	.46	.45	.45	.44	.42	.38	.35
10.0	.49	.48	.48	.48	.48	.47	.47	.46	.46	.45	.43	.40	.36
∞	.49	.49	.48	.48	.48	.47	.47	.47	.46	.45	.44	.41	.38

HEAD LOSS COEFFICIENTS DUE TO OBSTRUCTIONS			
$\frac{A}{A.}$*	K_j	A.	K_j
1.05	0.10	3.0	15.0
1.1	0.21	4.0	27.3
1.2	0.50	5.0	42.0
1.4	1.15	6.0	57.0
1.6	2.40	7.0	72.5
1.8	4.00	8.0	88.0
2.0	5.55	9.0	104.0
2.2	7.05	10.0	121.0
2.5	9.70		

*$\frac{A}{A.}$ = Ratio of area of pipe to opening at obstruction.

Source: City of Waco, Texas, Storm Drainage Design Manual

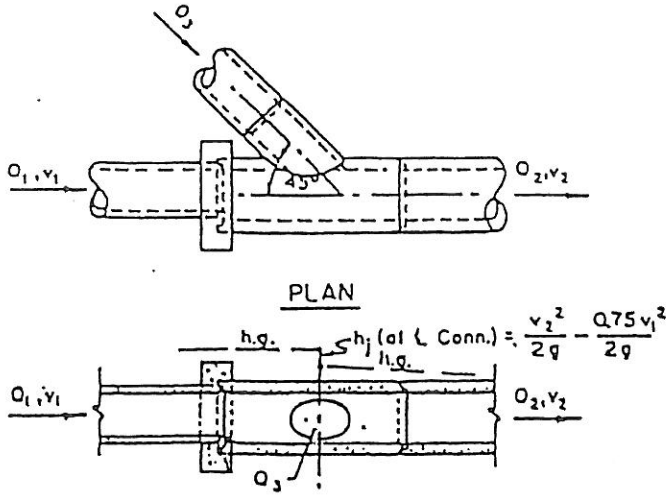

CASE V

45° WYE CONNECTION OR CUT IN

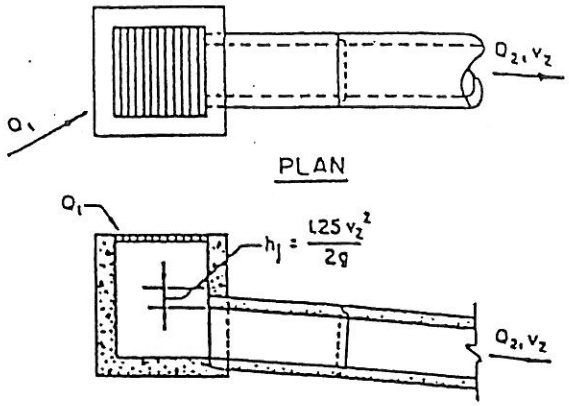

CASE VI

INLET OR MANHOLE AT BEGINNING OF LINE

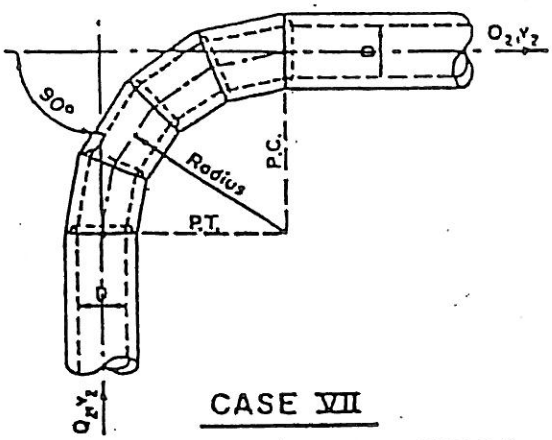

CASE VII

CONDUIT ON 90° CURVES *

NOTE: Head loss applied at P.C. for length of curve.

Radius = Dia. of Pipe $h_j = 0.50 \frac{V_2^2}{2g}$

Radius = (2-8) Dia. of Pipe $h_j = 0.25 \frac{V_2^2}{2g}$

Radius = (8-20) Dia. of Pipe $h_j = 0.40 \frac{V_2^2}{2g}$

Radius = Greater than 20 Dia. of Pipe $h_j = 0$

* When curves other than 90° are used, apply the following factors to 90° curves.
60° curve 85%
45° curve 70%
22½° curve 40%

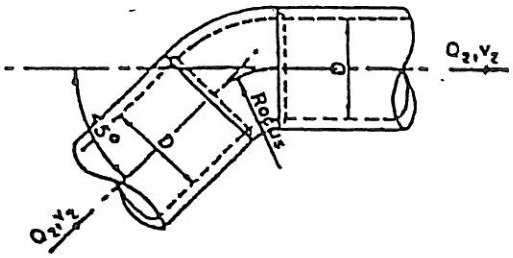

CASE VIII

BENDS WHERE RADIUS IS EQUAL TO DIAMETER OF PIPE

NOTE: Head loss applied at begining of bend

90° Bend $h_j = 0.50 \frac{V_2^2}{2g}$

60° Bend $h_j = 0.43 \frac{V_2^2}{2g}$

45° Bend $h_j = 0.35 \frac{V_2^2}{2g}$

22½° Bend $h_j = 0.20 \frac{V_2^2}{2g}$

SOURCE: City of Austin, Tx.

City of SPRINGDALE Arkansas

MINOR HEAD LOSSES DUE TO TURBULENCE AT STRUCTURES

Figure 3.1

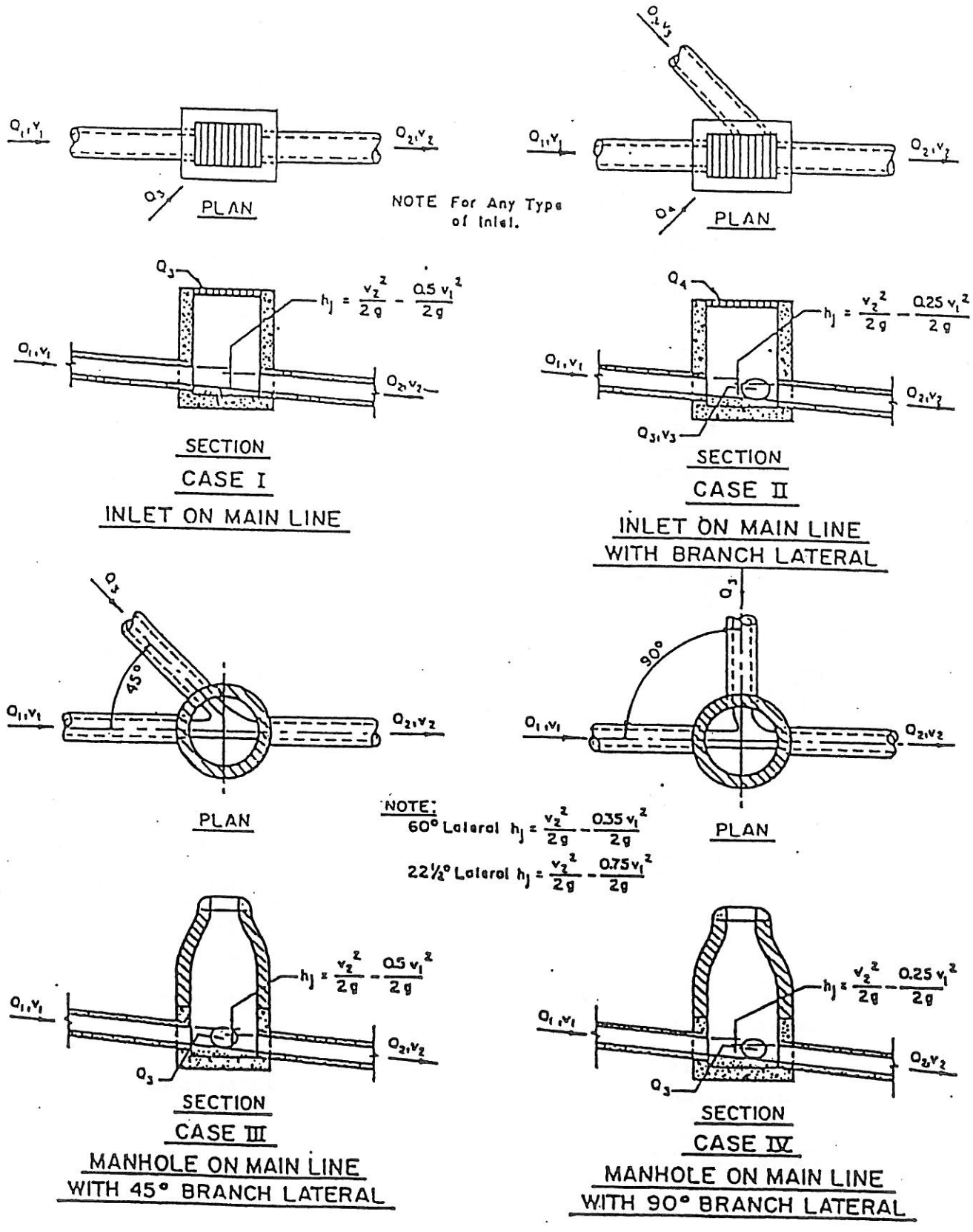

SOURCE: City of Austin, Tx.

City of SPRINGDALE Arkansas

MINOR HEAD LOSSES DUE TO TURBULENCE AT STRUCTURES

Figure 3.2

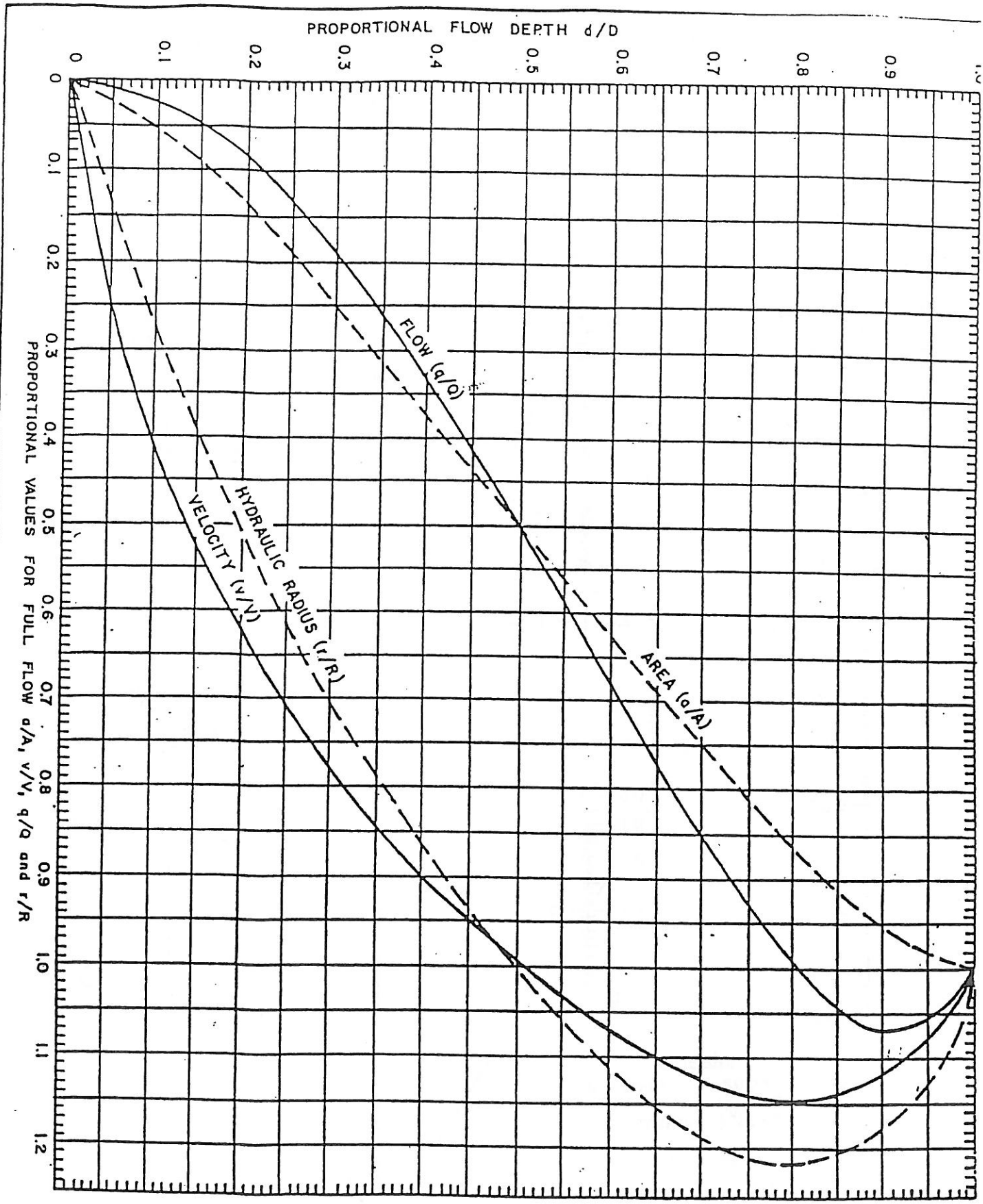

City of
SPRINGDALE
Arkansas

RELATIVE VELOCITY, AREA, AND DISCHARGE
IN A CIRCULAR PIPE FOR ANY DEPTH OF FLOW

Figure 3.3

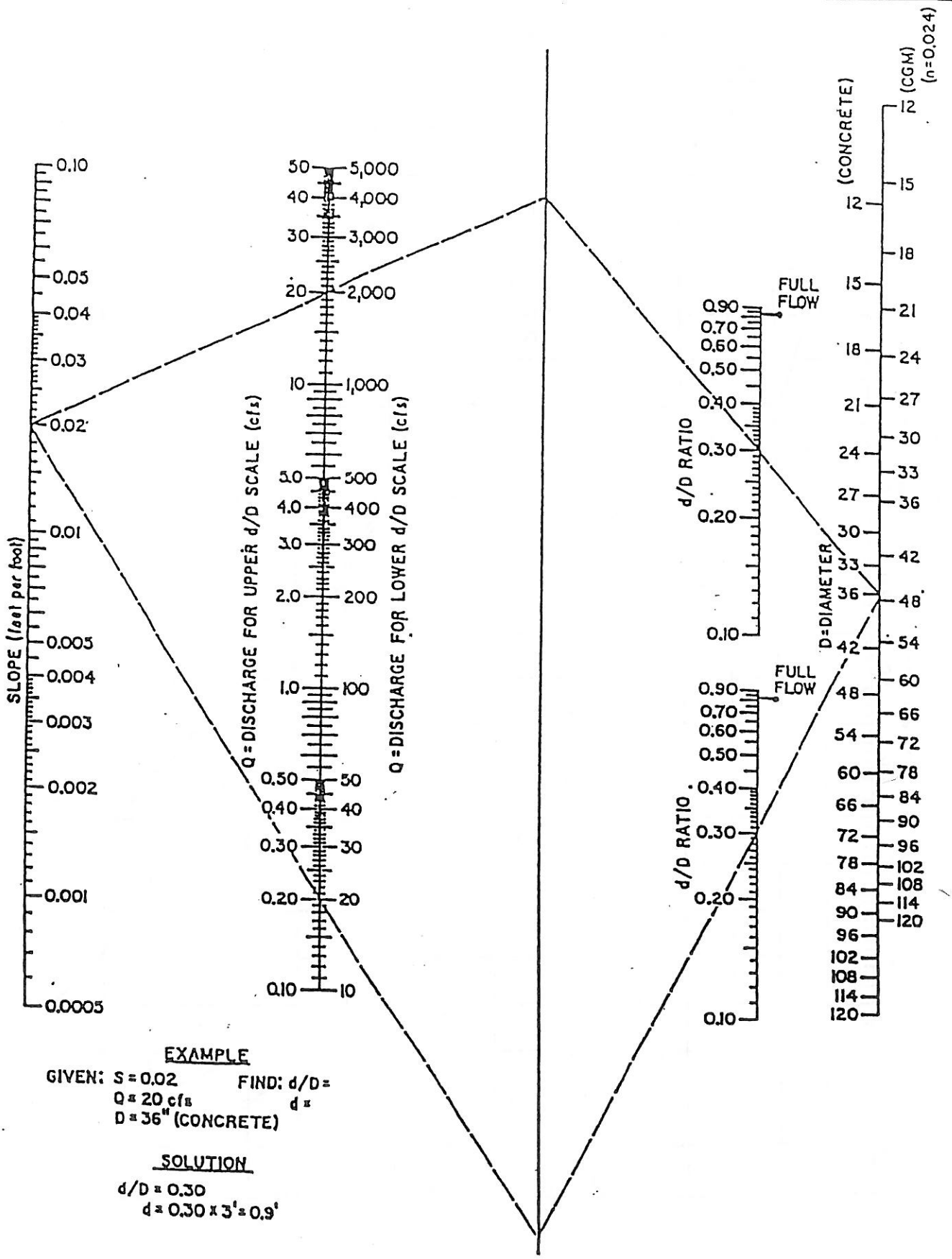

EXAMPLE

GIVEN: S = 0.02
Q = 20 cfs
D = 36" (CONCRETE)

FIND: d/D =
d =

SOLUTION

d/D = 0.30
d = 0.30 x 3' = 0.9'

SOURCE: AHTD

City of
SPRINGDALE
Arkansas

UNIFORM FLOW FOR PIPE CULVERTS

Figure 3.4

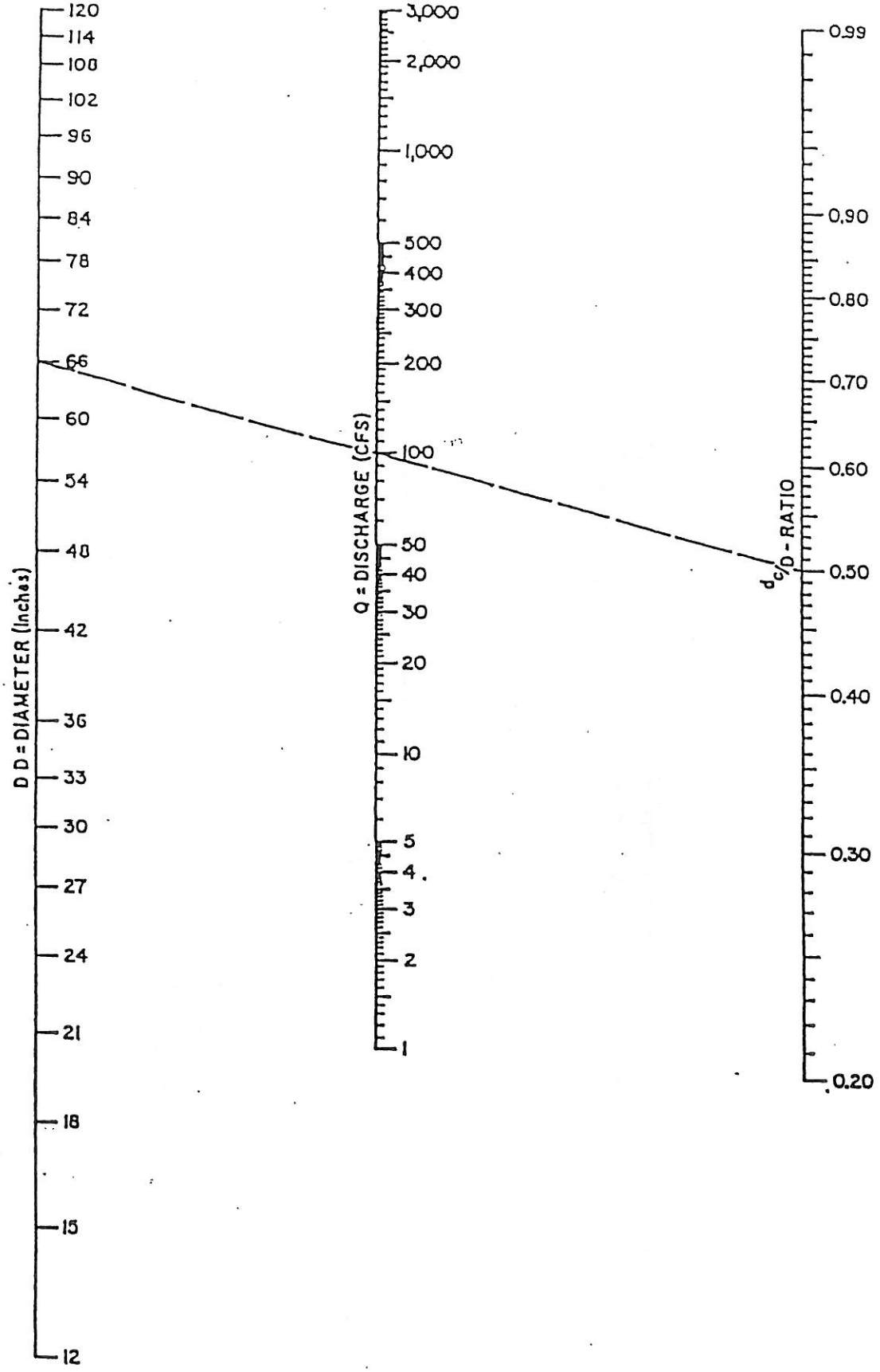

City of
SPRINGDALE
Arkansas

CRITICAL DEPTH OF FLOW FOR CIRCULAR CONDUITS

SOURCE: AHTD

Figure 3.5

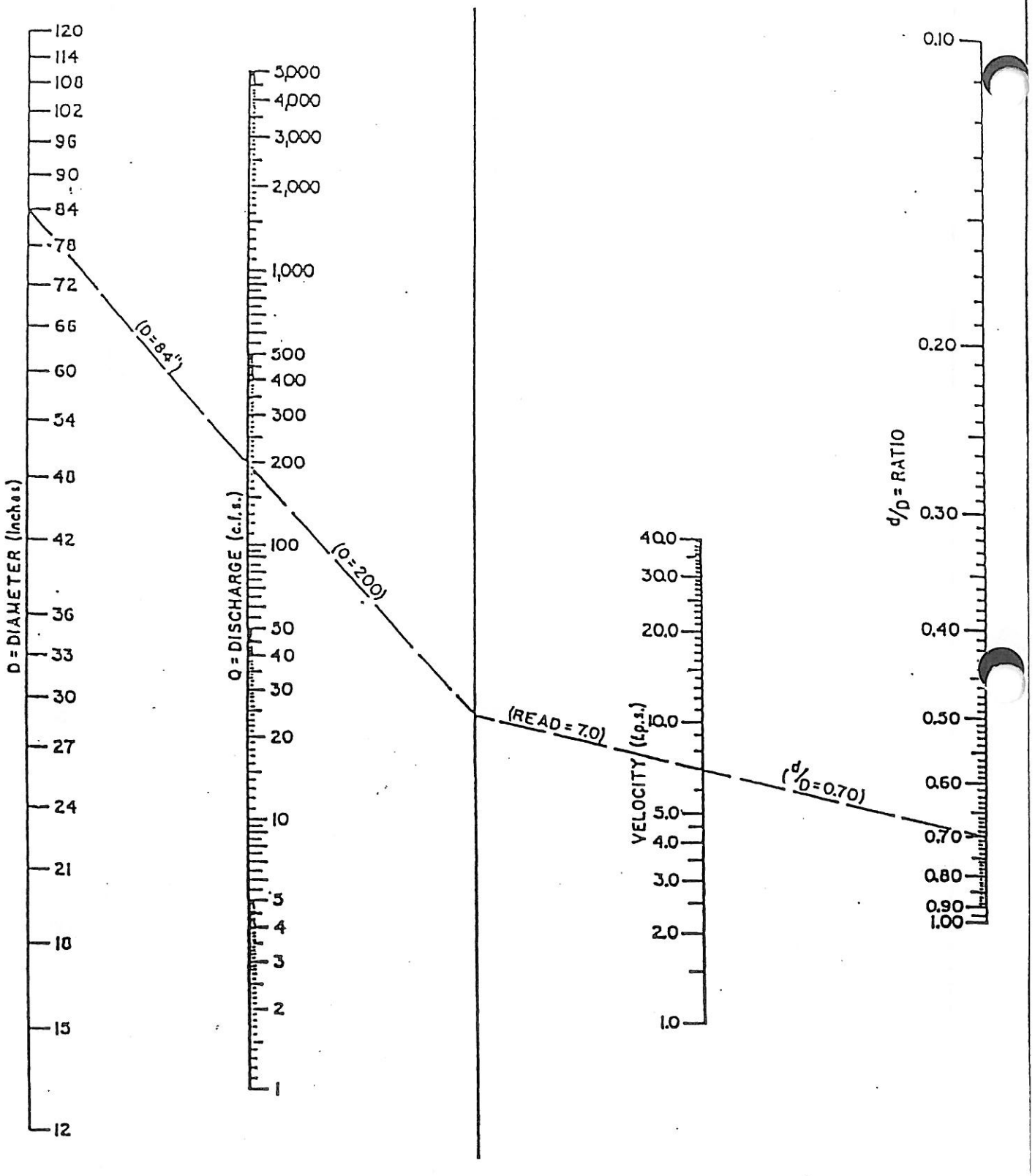

City of
SPRINGDALE
Arkansas

VELOCITY IN PIPE CONDUITS

Figure 3.6

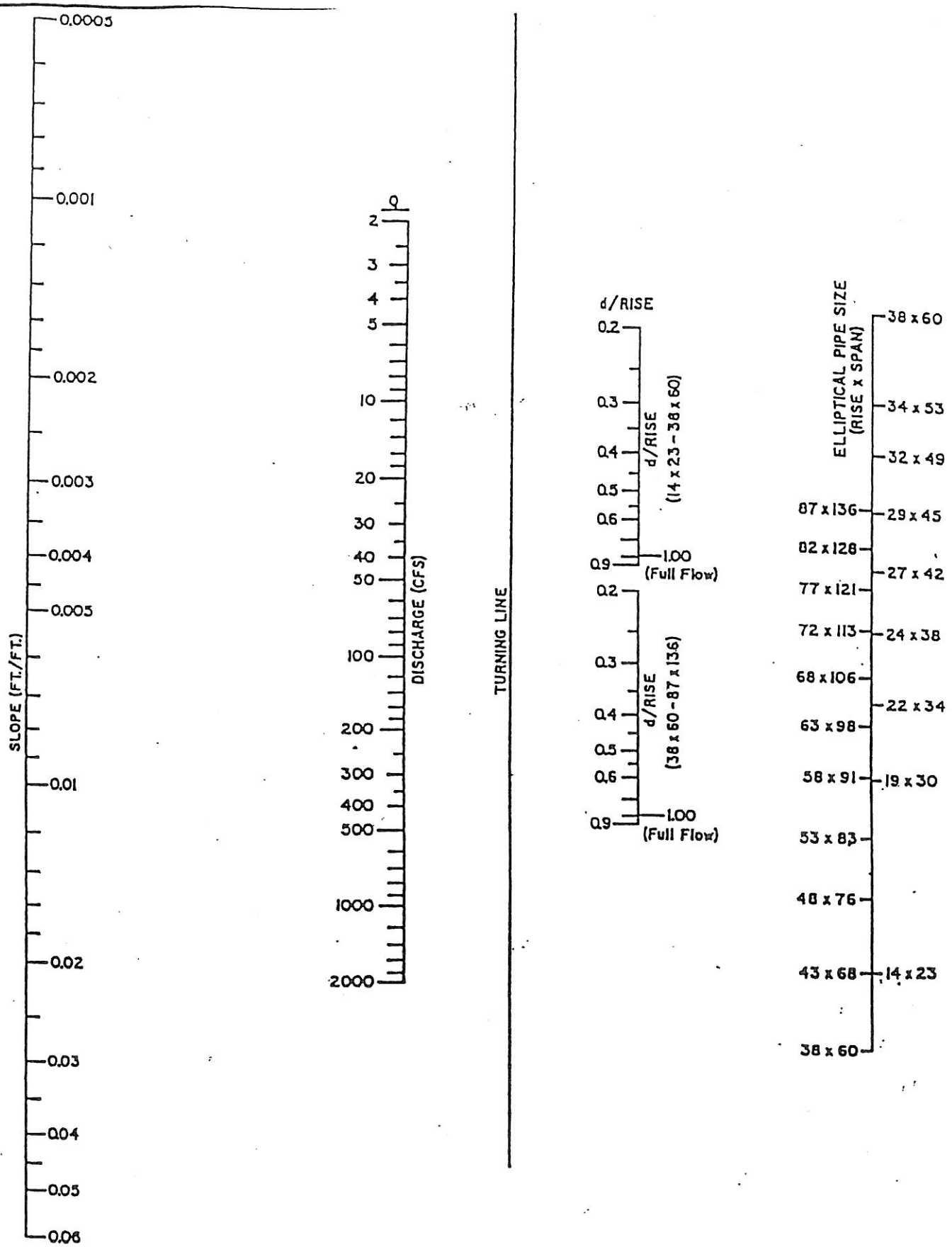

City of
SPRINGDALE
Arkansas

UNIFORM FLOW FOR CONCRETE ELLIPTICAL PIPE

Figure 3.7

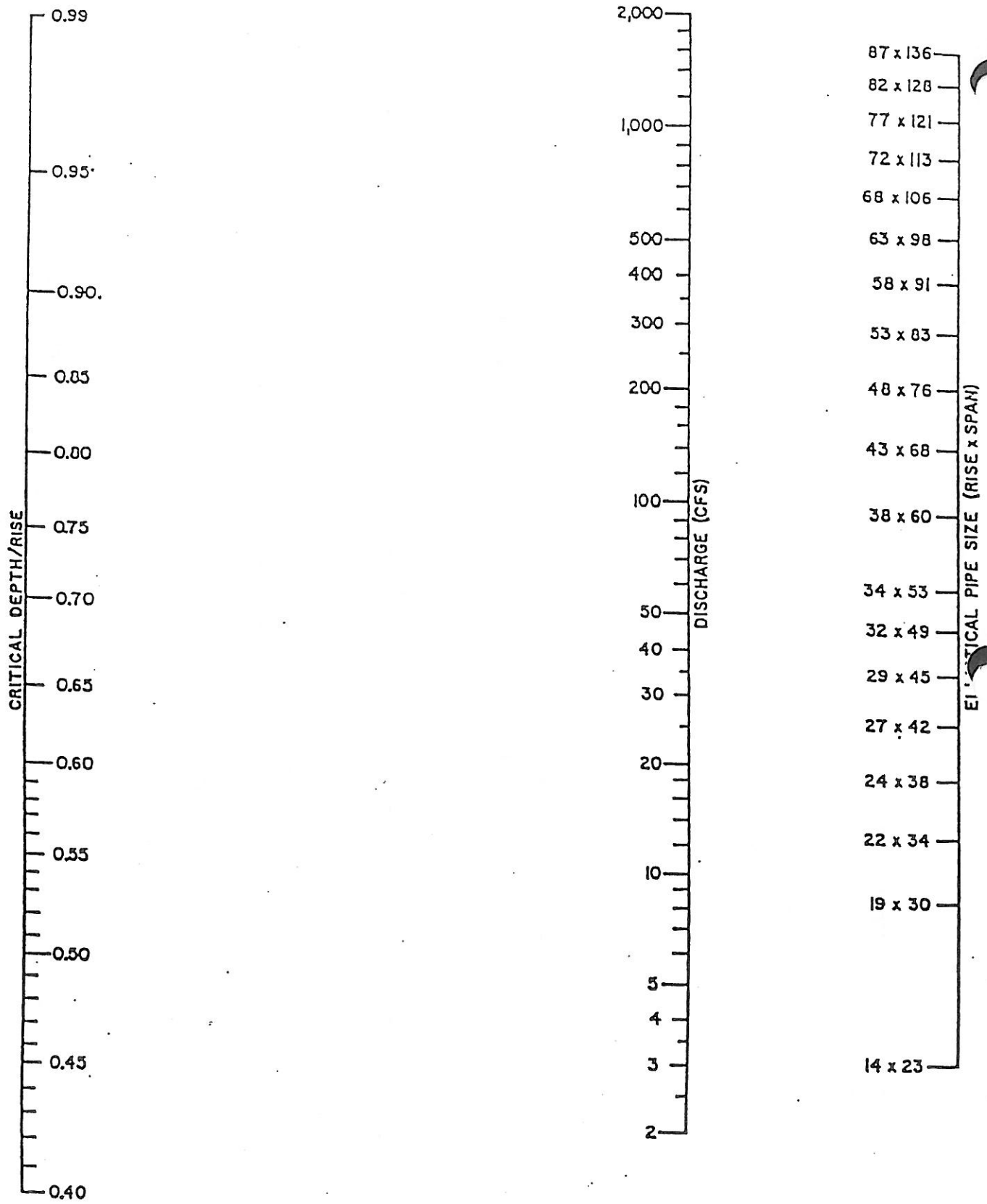

City of
SPRINGDALE
Arkansas

CRITICAL DEPTH FOR ELLIPTICAL PIPE

Figure 3.8

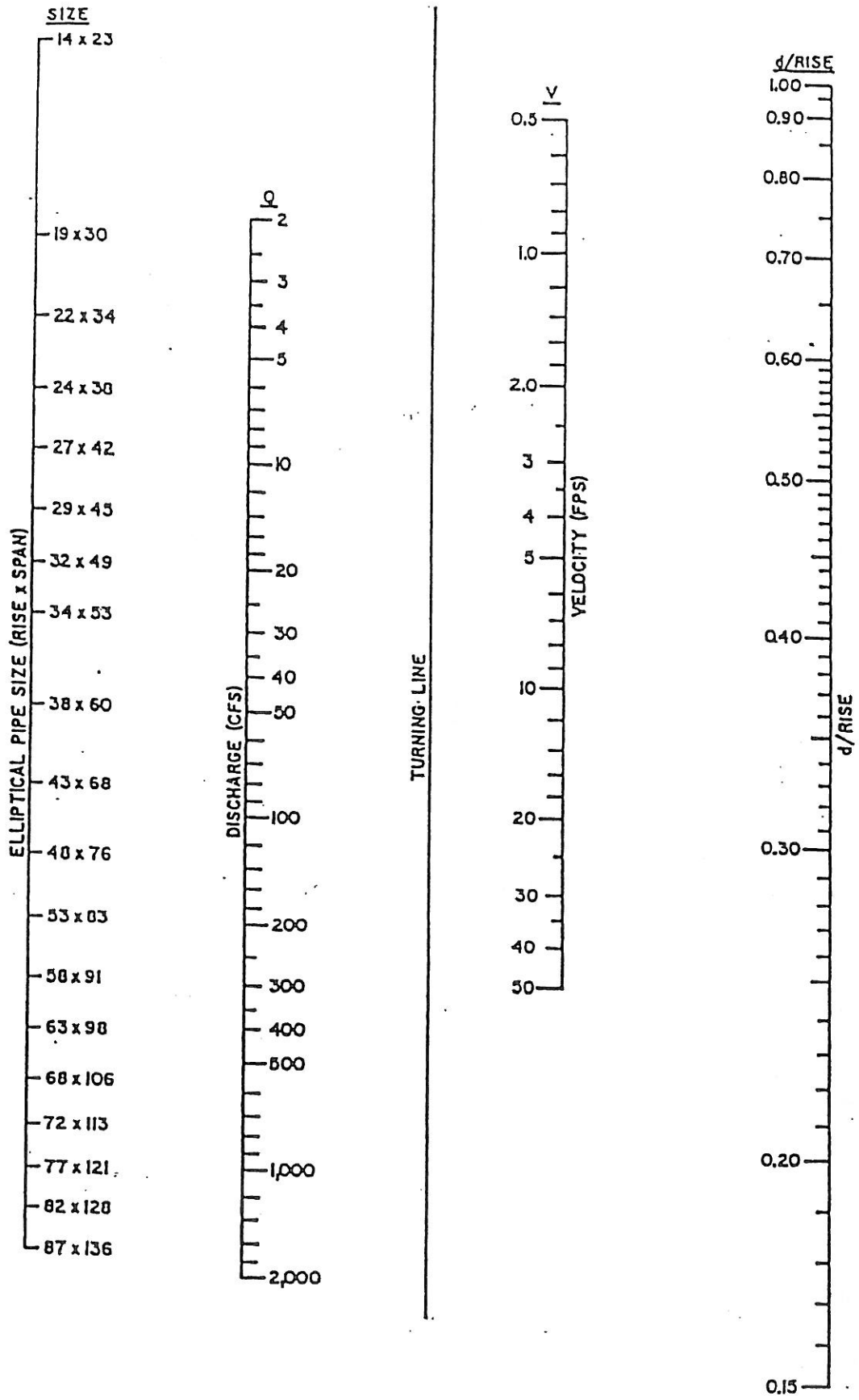

City of
SPRINGDALE
Arkansas

VELOCITY IN ELLIPTICAL PIPE

Figure 3.9

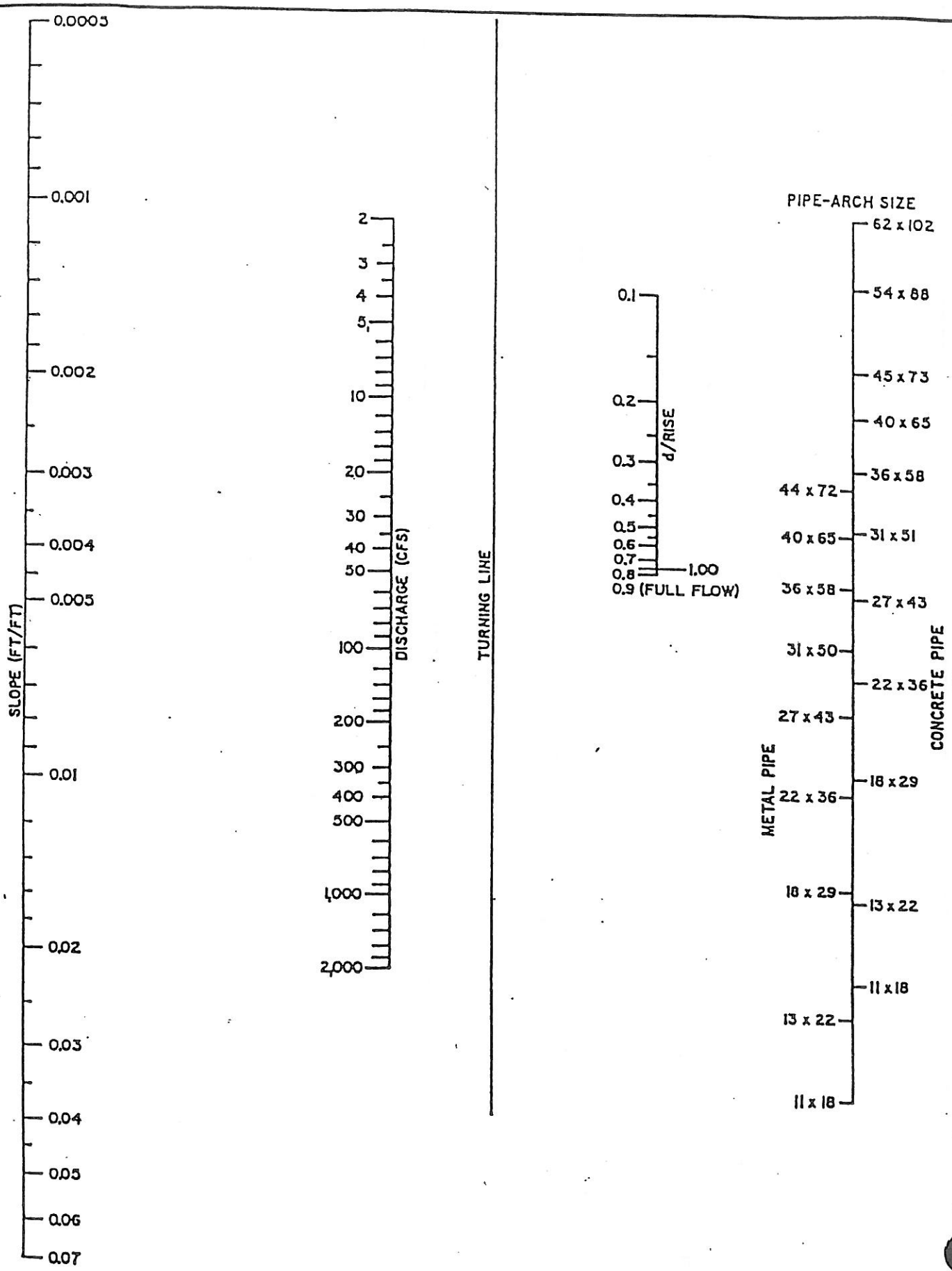

City of
SPRINGDALE
Arkansas

UNIFORM FLOW FOR ARCH PIPE

Figure 3.10

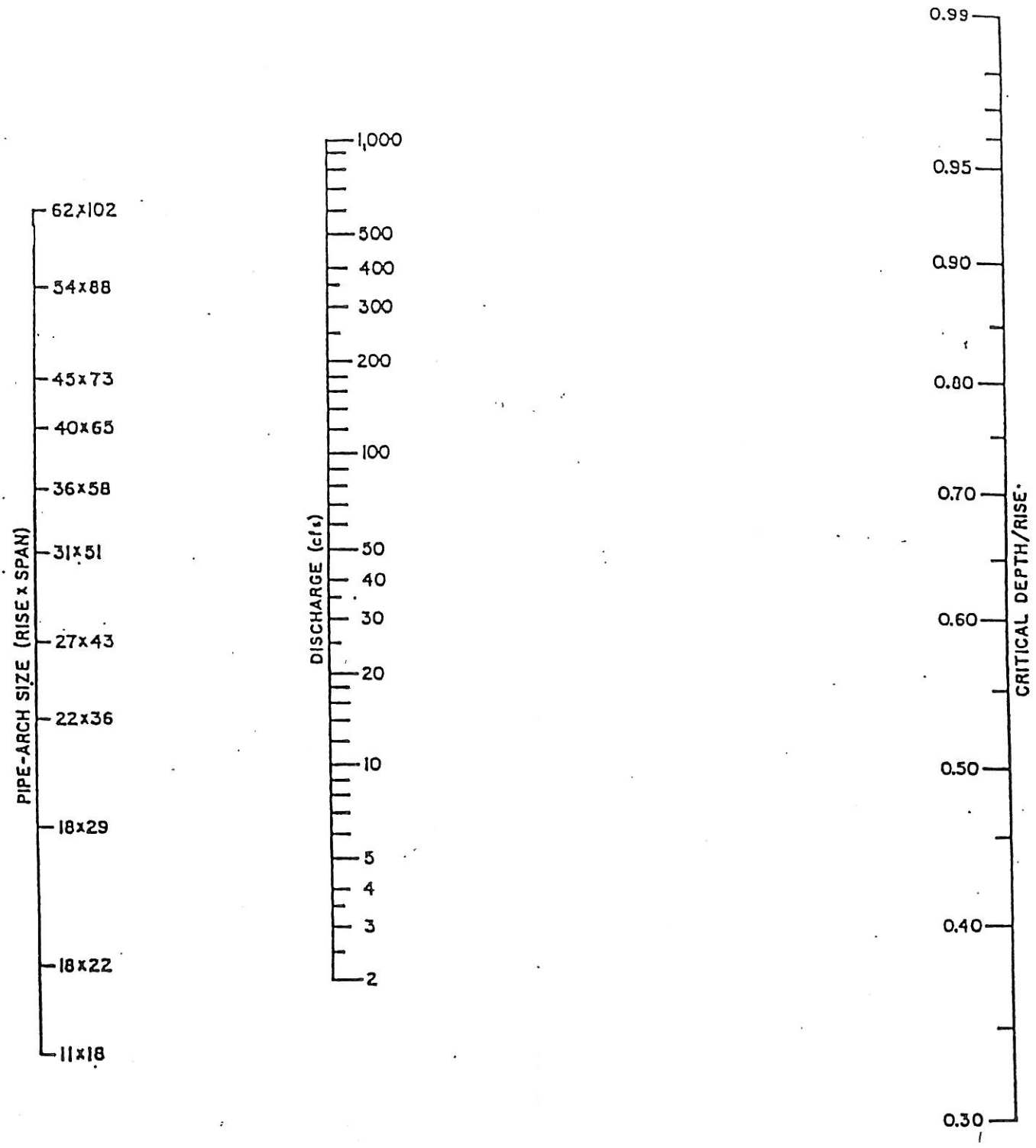

City of
SPRINGDALE
Arkansas

CRITICAL DEPTH OF FLOW
FOR ARCH PIPE

Figure 3.11

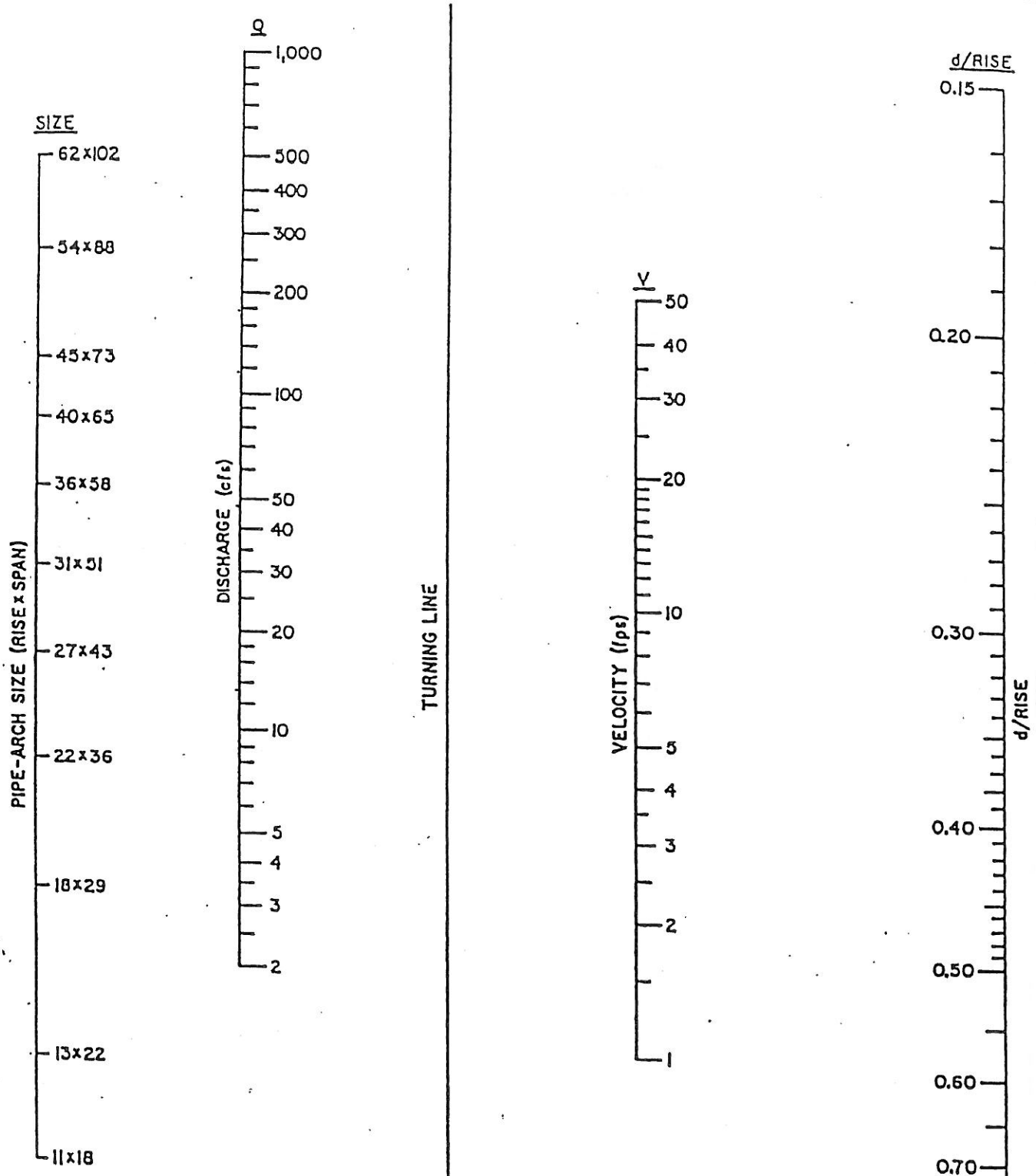

City of
SPRINGDALE
Arkansas

VELOCITY IN ARCH PIPE

Figure 3.12