APPENDIX 7

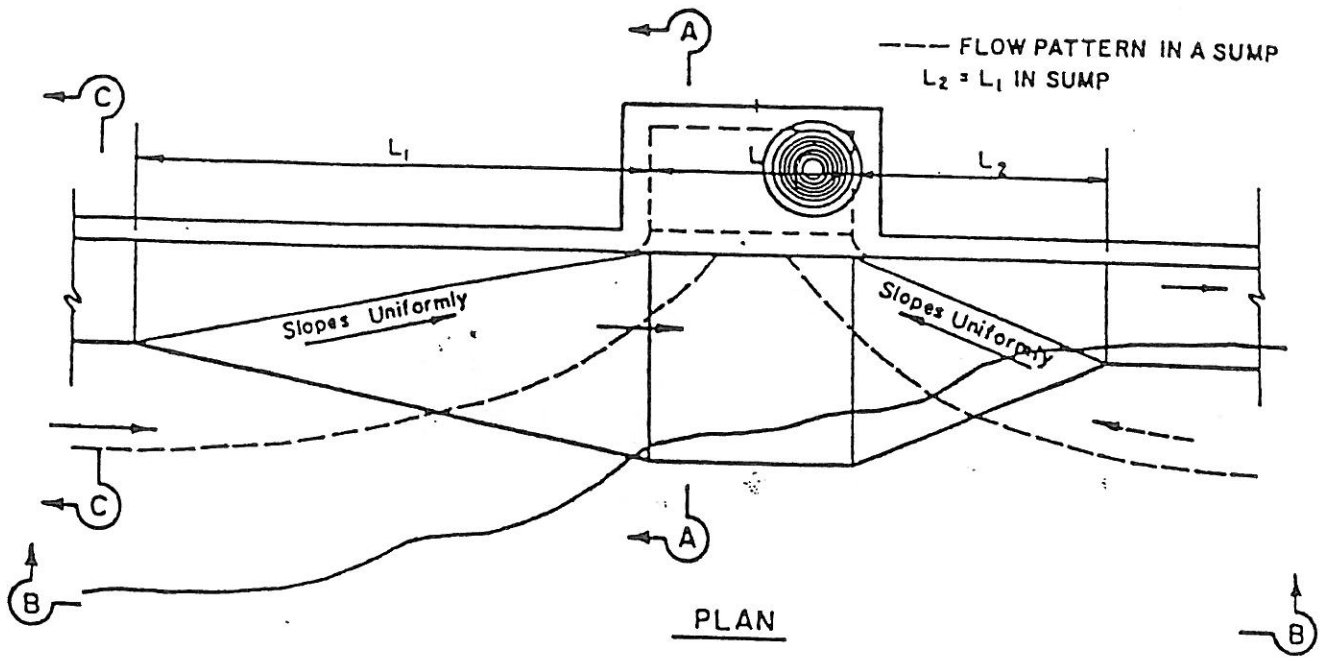

PLAN

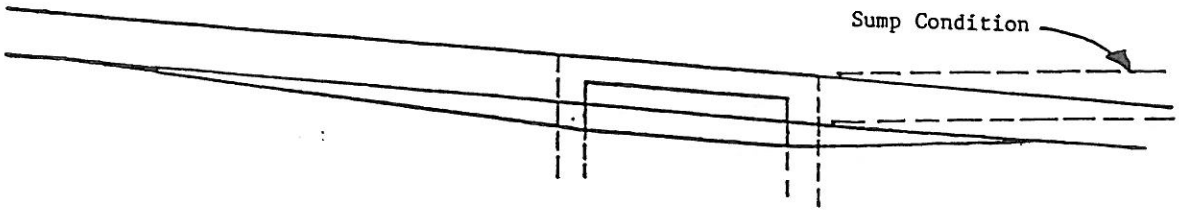

SECTION B-B

$$E = y_0 + \frac{v_0^2}{2g} + a$$

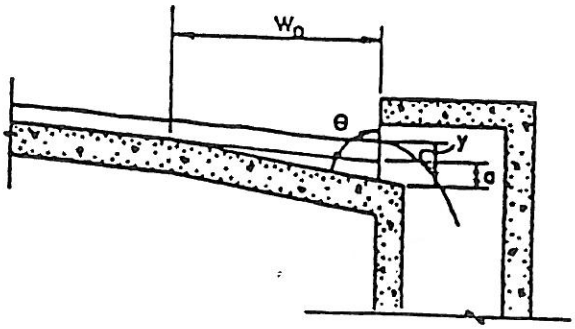

SECTION A-A

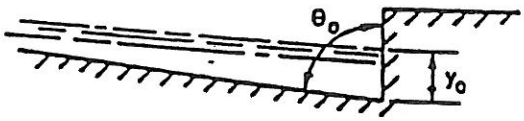

SECTION C-C

City of
SPRINGDALE
Arkansas

DEPRESSED CURB-OPENING INLET
TYPE A-1 & C-1

Source: City of Austin, Tx.

Figure 7.1

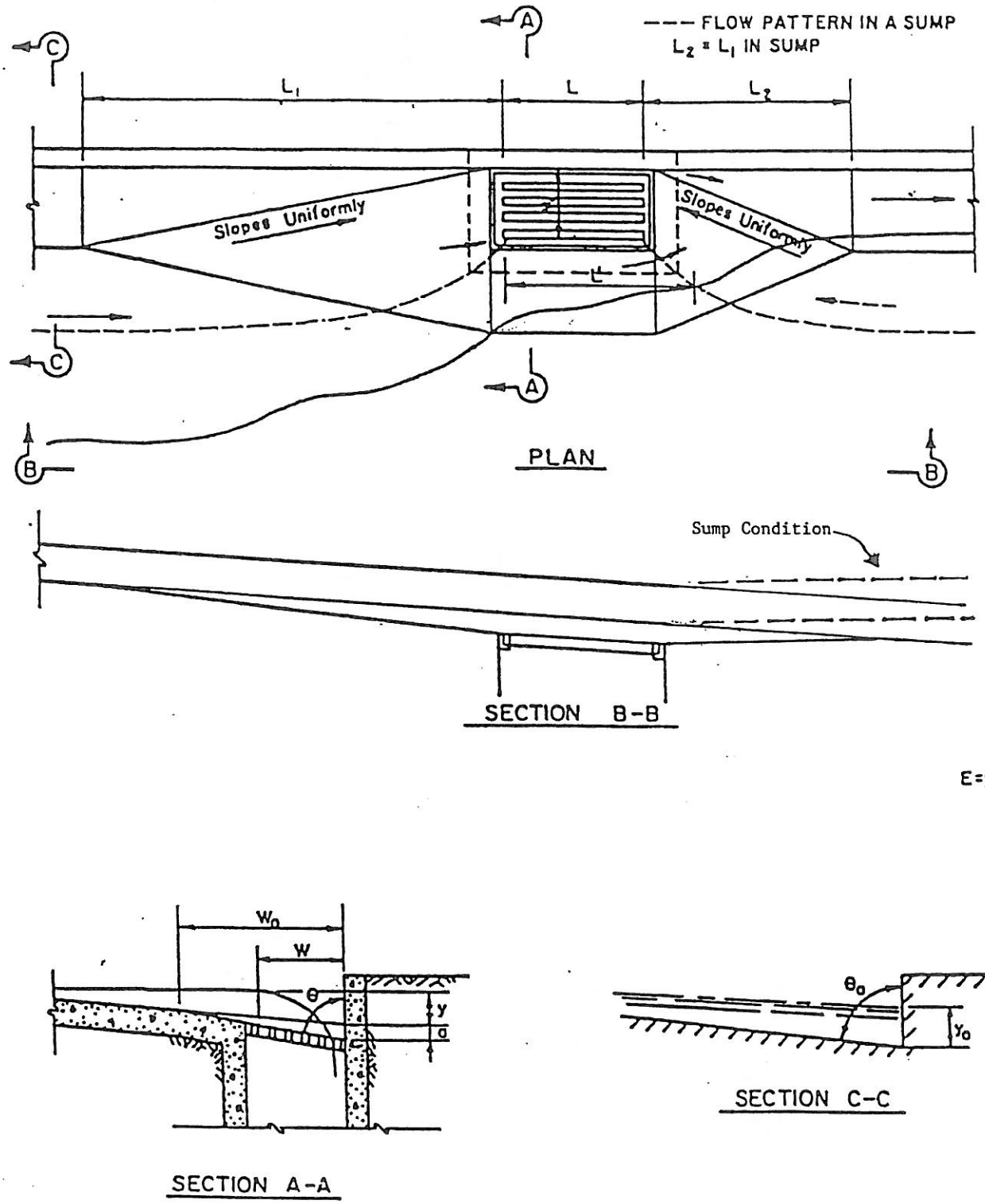

City of
SPRINGDALE
Arkansas

DEPRESSED GRATE INLET
TYPE A-2 & C-2

Figure 7.2

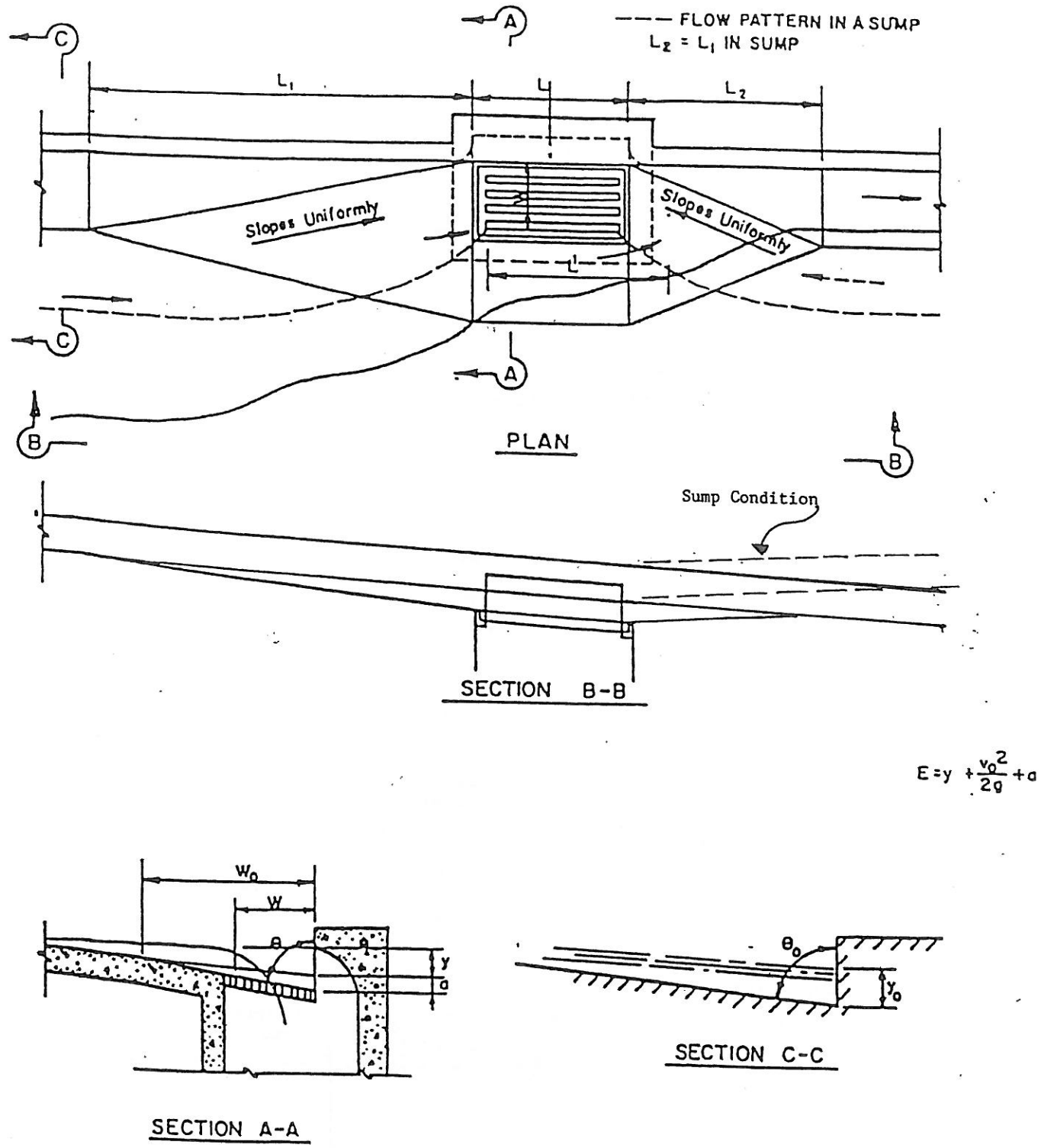

City of
SPRINGDALE
Arkansas

DEPRESSED COMBINATION INLET
TYPE A-3 & C-3

Figure 7.3

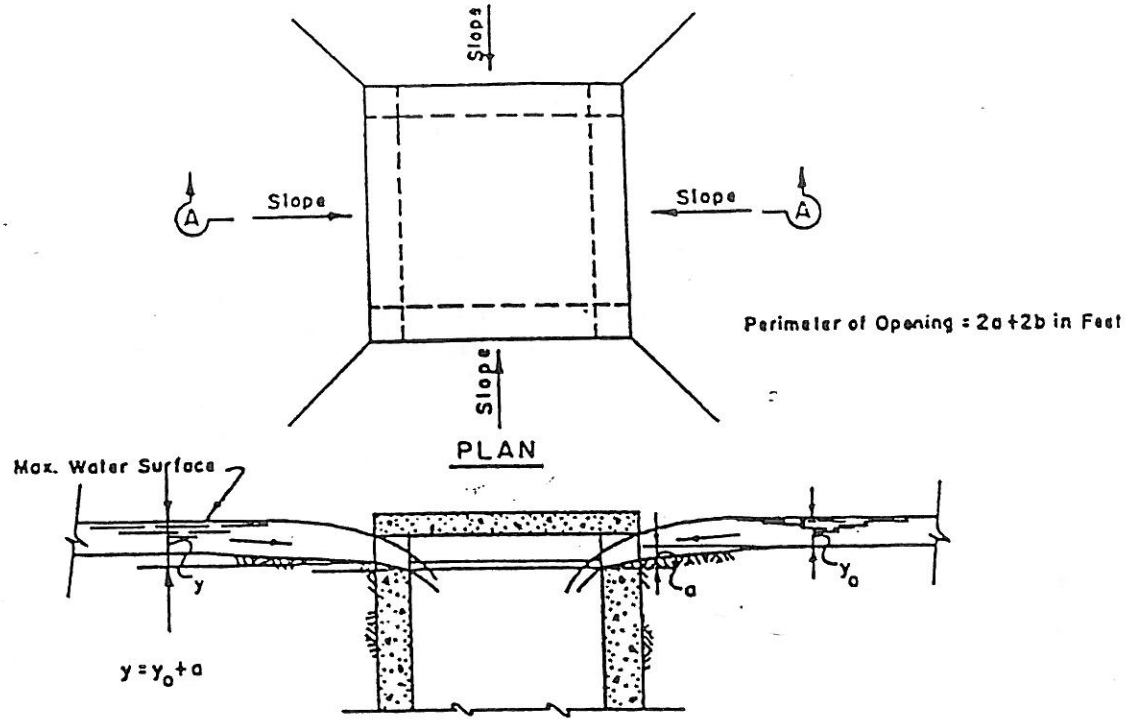

SECTION A-A

DROP INLET
TYPE A-4

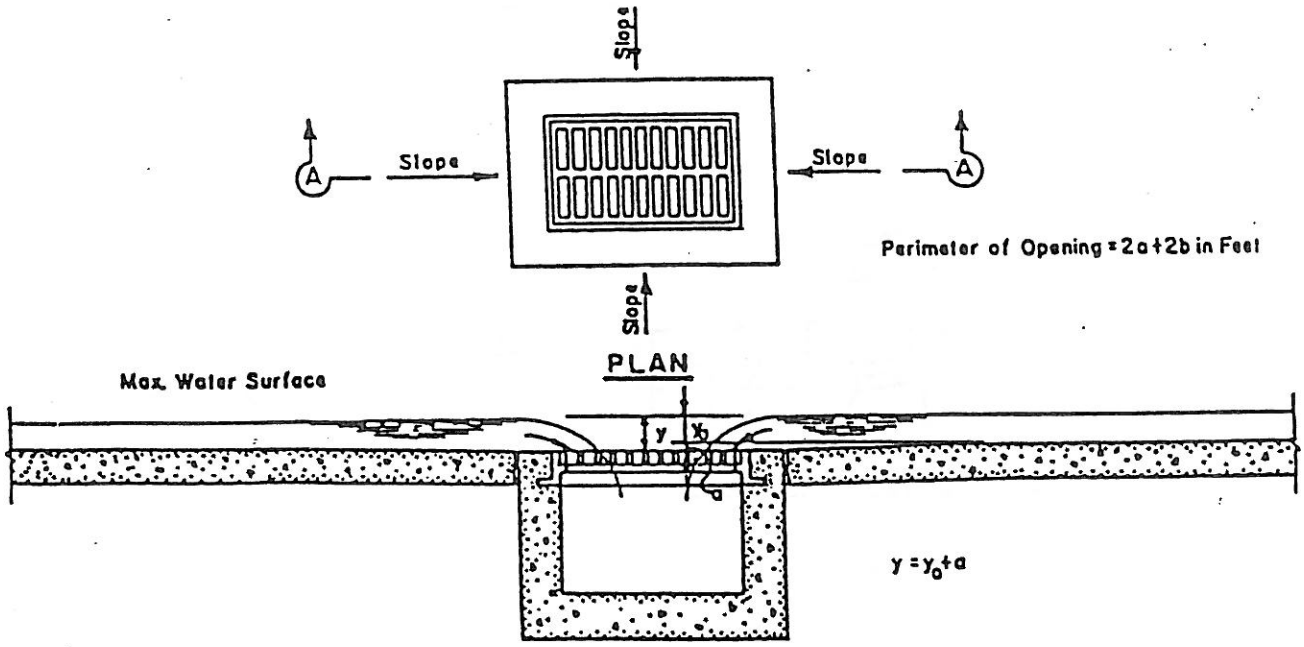

SECTION A-A

DROP INLET
(Grate covering)
Type A-5

City of SPRINGDALE Arkansas	DROP INLET (Grate Covering) Type A-4 and DROP INLET (Grate Covering) TYPE A-5	Figure 7.4

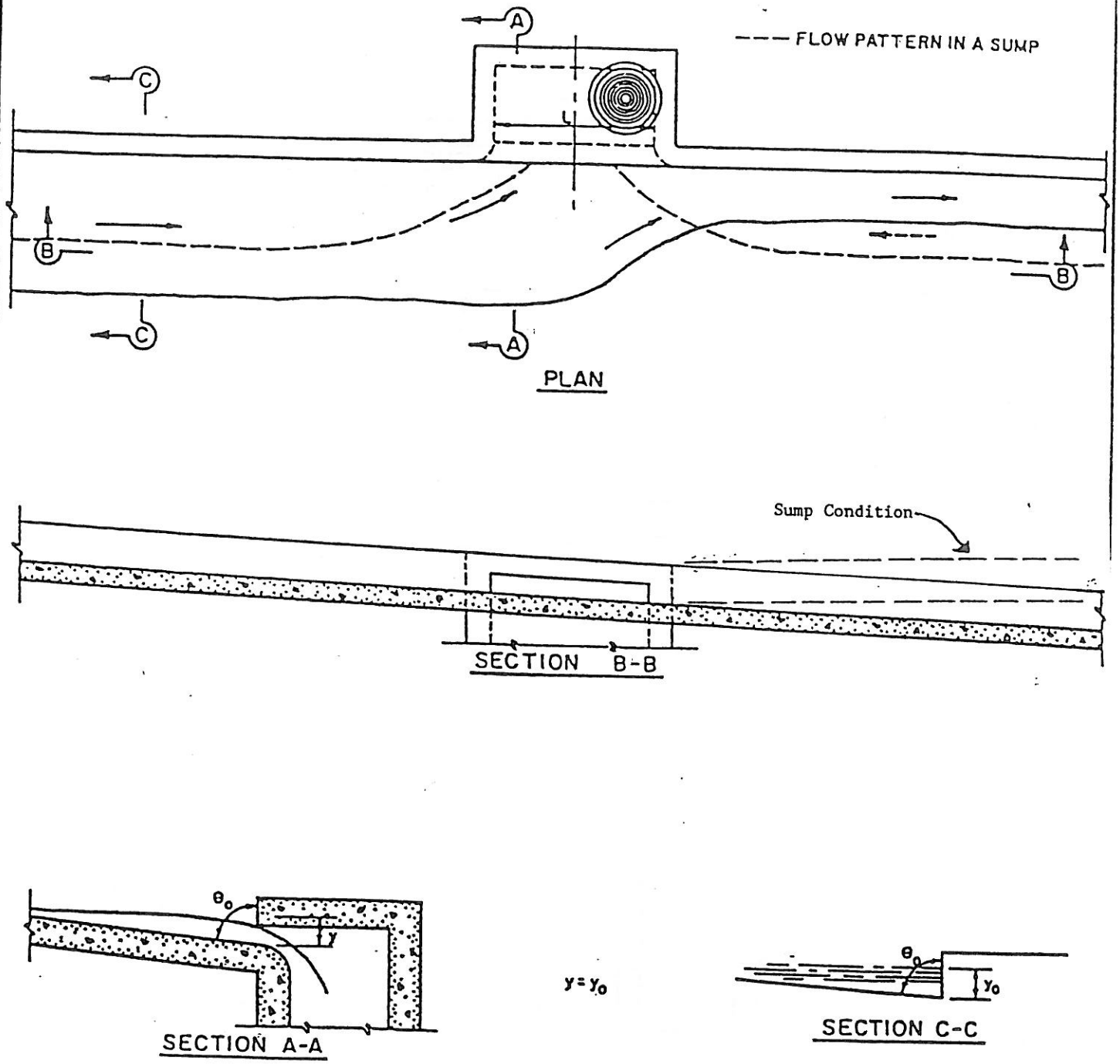

City of
SPRINGDALE
Arkansas

UNDEPRESSED CURB-OPENING
INLET TYPE A-1 & B-1 (RECESSED)

Figure 7.5

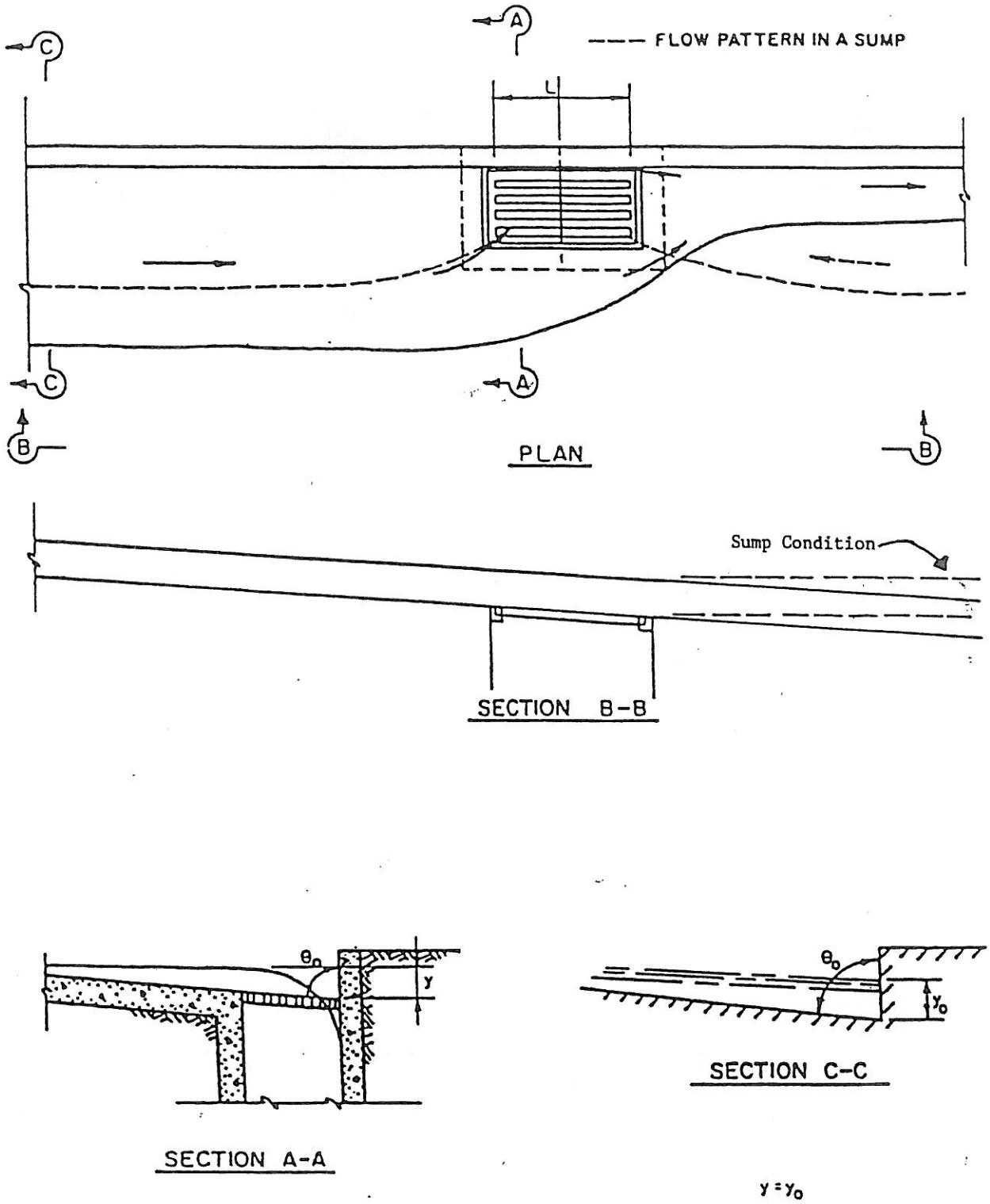

City of
SPRINGDALE
Arkansas

UNDEPRESSED GRATE INLET
TYPE A-2 & B-2

Figure 7.6

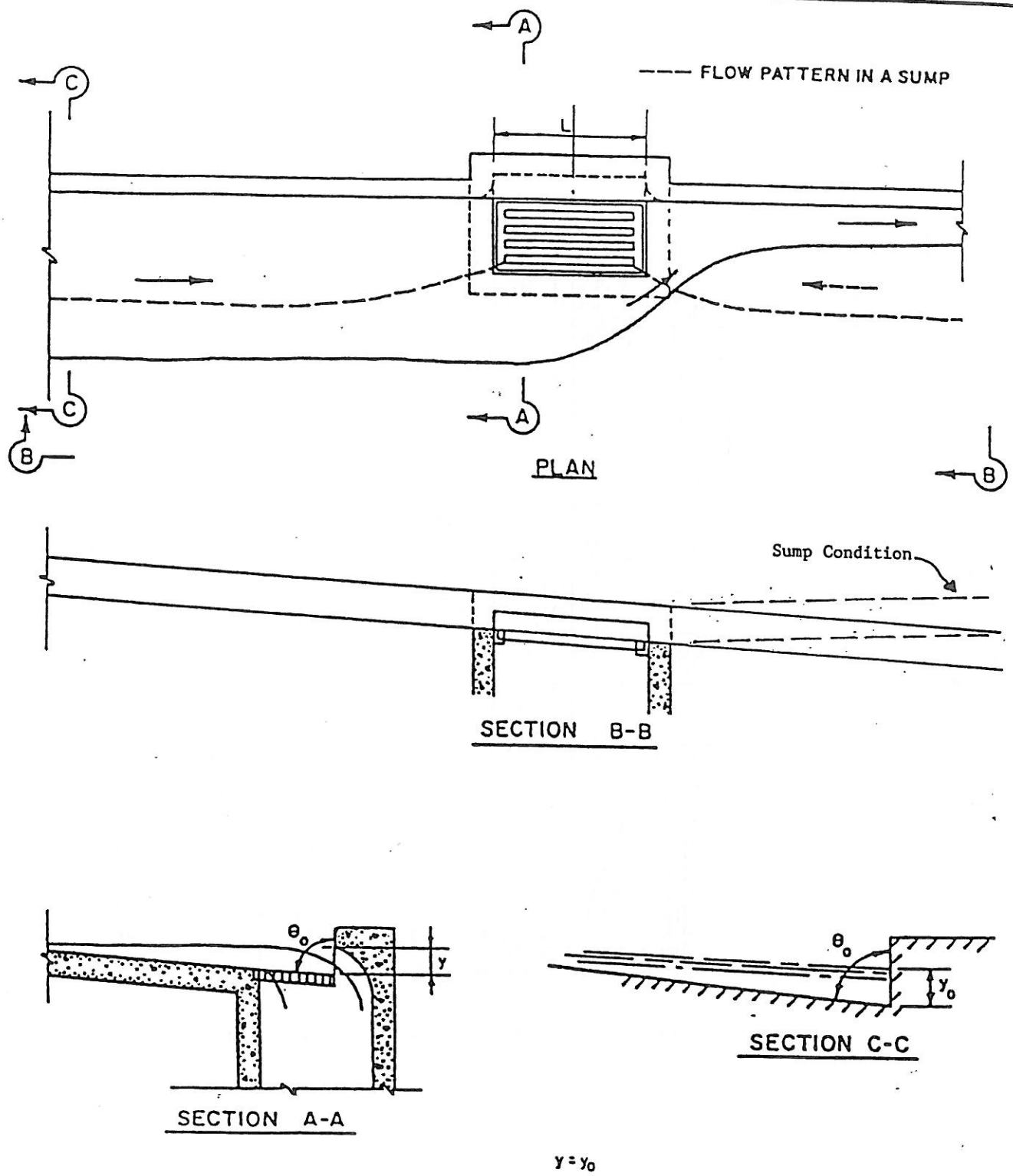

City of
SPRINGDALE
Arkansas

UNDEPRESSED COMBINATION
INLET TYPE A-3 & B-3 (RECESSED)

Figure 7.7

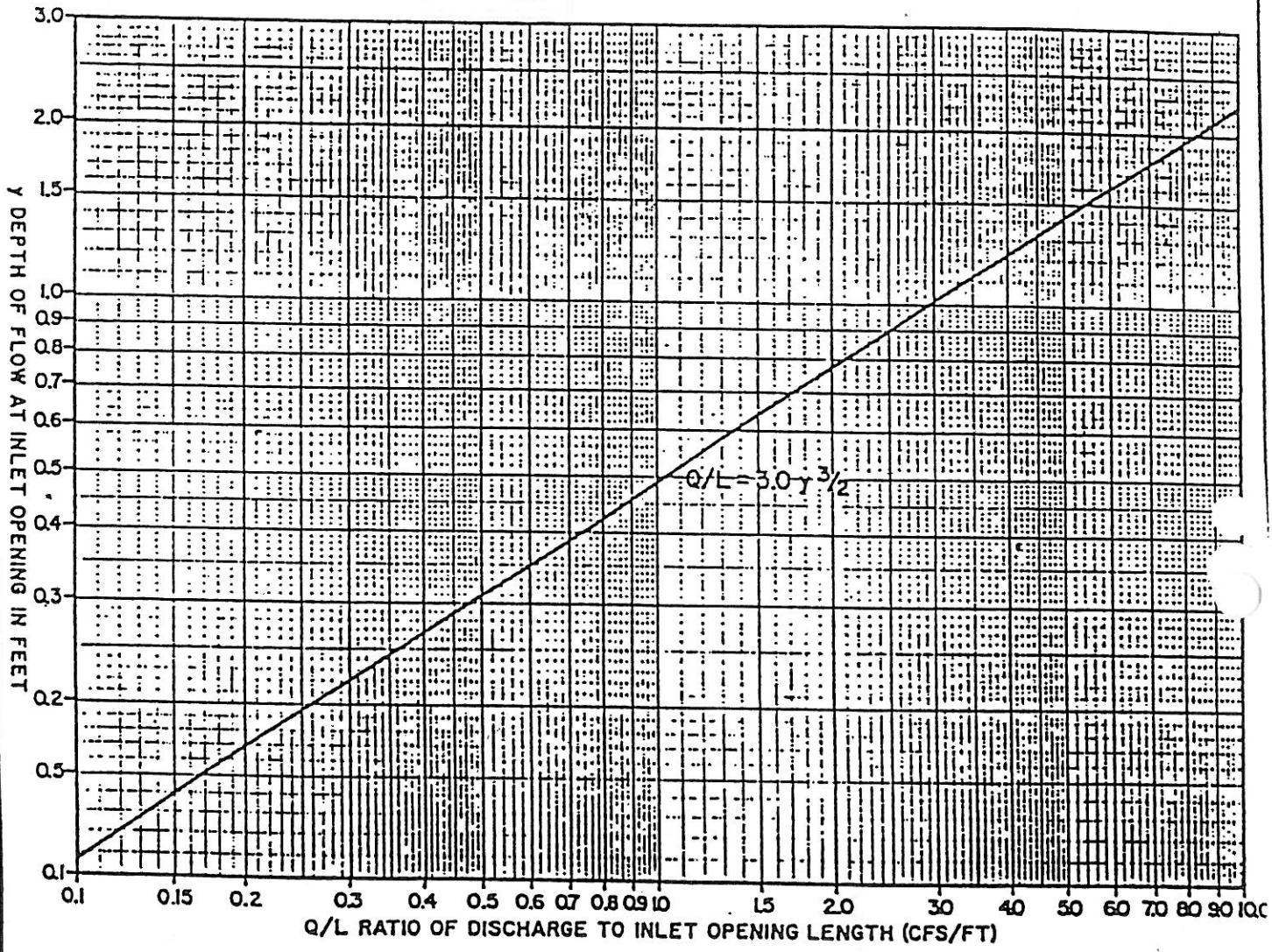

City of
SPRINGDALE
Arkansas

INLET CAPACITY TYPE A-1 & A-4

Source: City of Little Rock, AR

Figure 7.8

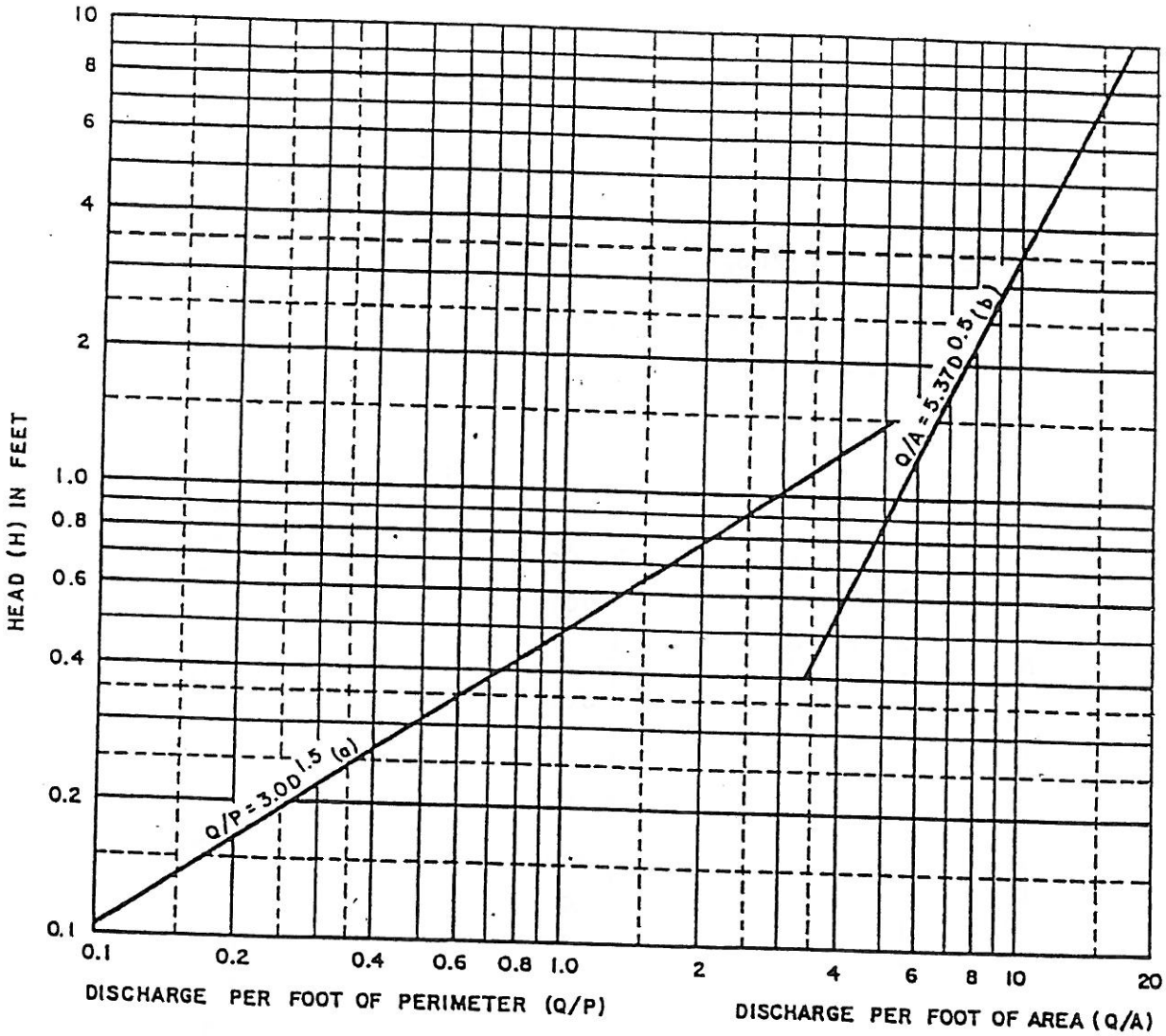

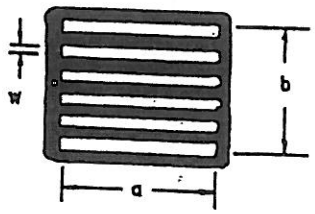

$P = 2(a + b)$

$A = 6\ aw$

HEADS UP TO 0.4, CURVE (a) APPLIES
HEADS ABOVE 1.4, CURVE (b) APPLIES
HEADS BETWEEN 0.4 & 1.4, TRANSITION SECTOR, USE LESSOR VALUE OF DISCHARGE

CAPACITY OF GRATE INLET IN SAG

City of
SPRINGDALE
Arkansas

INLET CAPACITY TYPE A-2 & A-5

Source: AHTD

Figure 7.9

$$L_T = 0.6 Q^{0.42} S^{0.3} (1/nS_x)^{0.6}$$

FOR COMPOSITE CROSS SLOPES, USE S_e FOR S_x.

$S_e = S_x + S'_w E_o$; $S'_w = a/W$

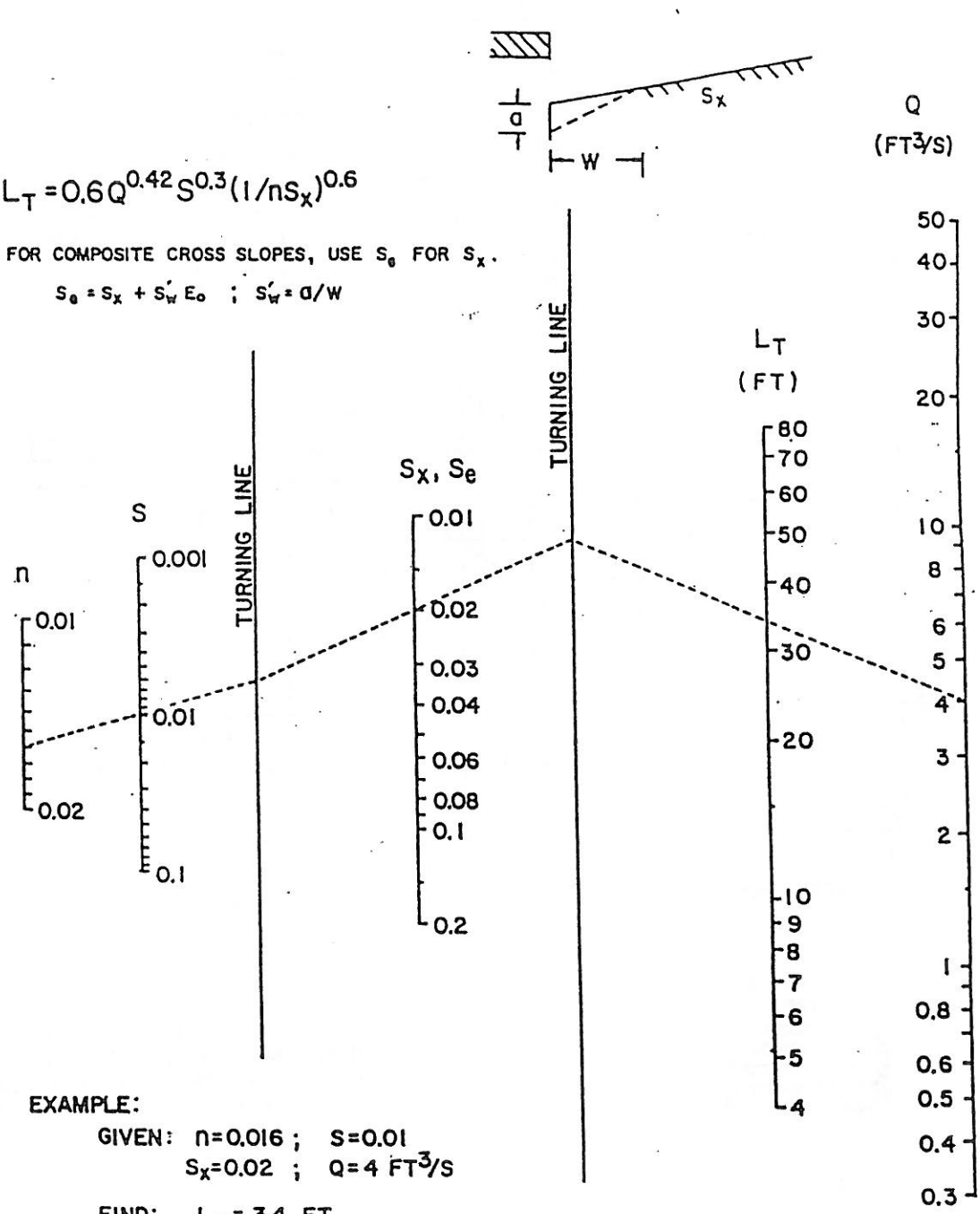

EXAMPLE:

GIVEN: $n = 0.016$; $S = 0.01$

$S_x = 0.02$; $Q = 4\ FT^3/S$

FIND: $L_T = 34$ FT

Source: Federal Highway Administration - Circular 12

City of
SPRINGDALE
Arkansas

CURB-OPENING AND SLOTTED DRAIN INLET LENGTH FOR TOTAL INTERCEPTION

Figure 7.10

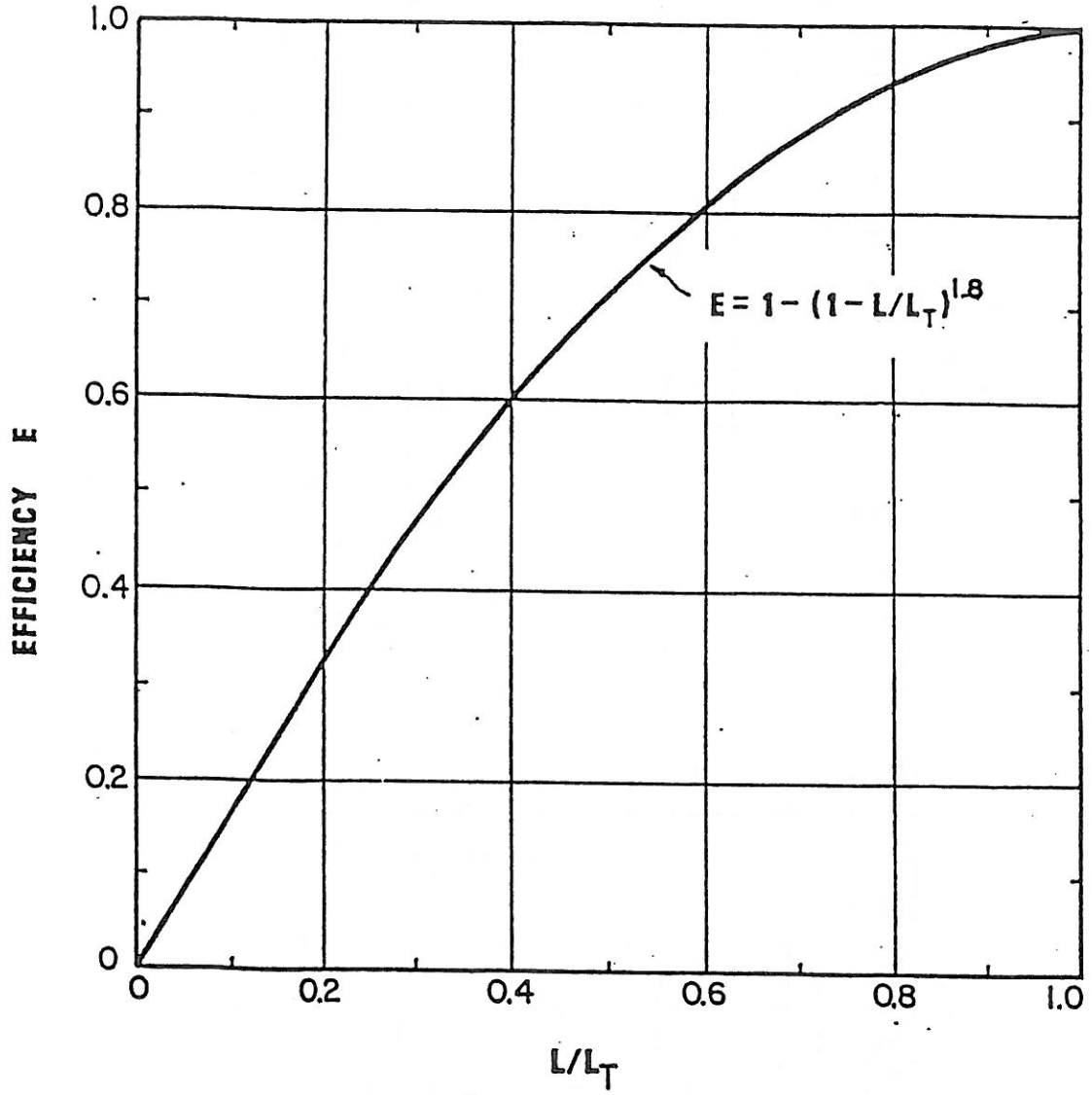

Source: Federal Highway Administration - Circular 12

City of
SPRINGDALE
Arkansas

CURB-OPENING AND SLOTTED DRAIN INLET
INTERCEPTION EFFICIENCY

Figure 7.11

City of
SPRINGDALE
Arkansas

INLET FLOW CALCULATION TABLE

PROJECT_____
PLAN SHT. NO._____DATE_____
COMPUTED BY_____CKD._____

NO.	LOCATION	AREA (AC)	C	Tc (MIN)	I (IN/HR)	RUNOFF AT INLET (CA)	CARRY OVER (CA)	TOTAL FLOW Qt (CFS)	n	RDWY SLOPE S	CROSS SLOPE Sx	PONDED WIDTH T (FT)	DEPTH AT CURB d (FT)	VEL V (FPS)	L (FT)	a (IN)	W (FT)	Eo	Se	Lt (FT)	E	Qi (CFS)	RF	Qa (CFS)	BYPASS Qp (CFS)	CARRY OVER (CA)
1	2	3	4	5	6	7	8	9	10	11	12	13	14	15	16	17	18	19	20	21	22	23	24	25	26	27

INLET FLOW CALCULATION TABLE

Figure 7.12